Self-Lock Petal Box

2.25 x 2.25 x 1.25 in internal | 350 GSM | caliper 0.45 mm

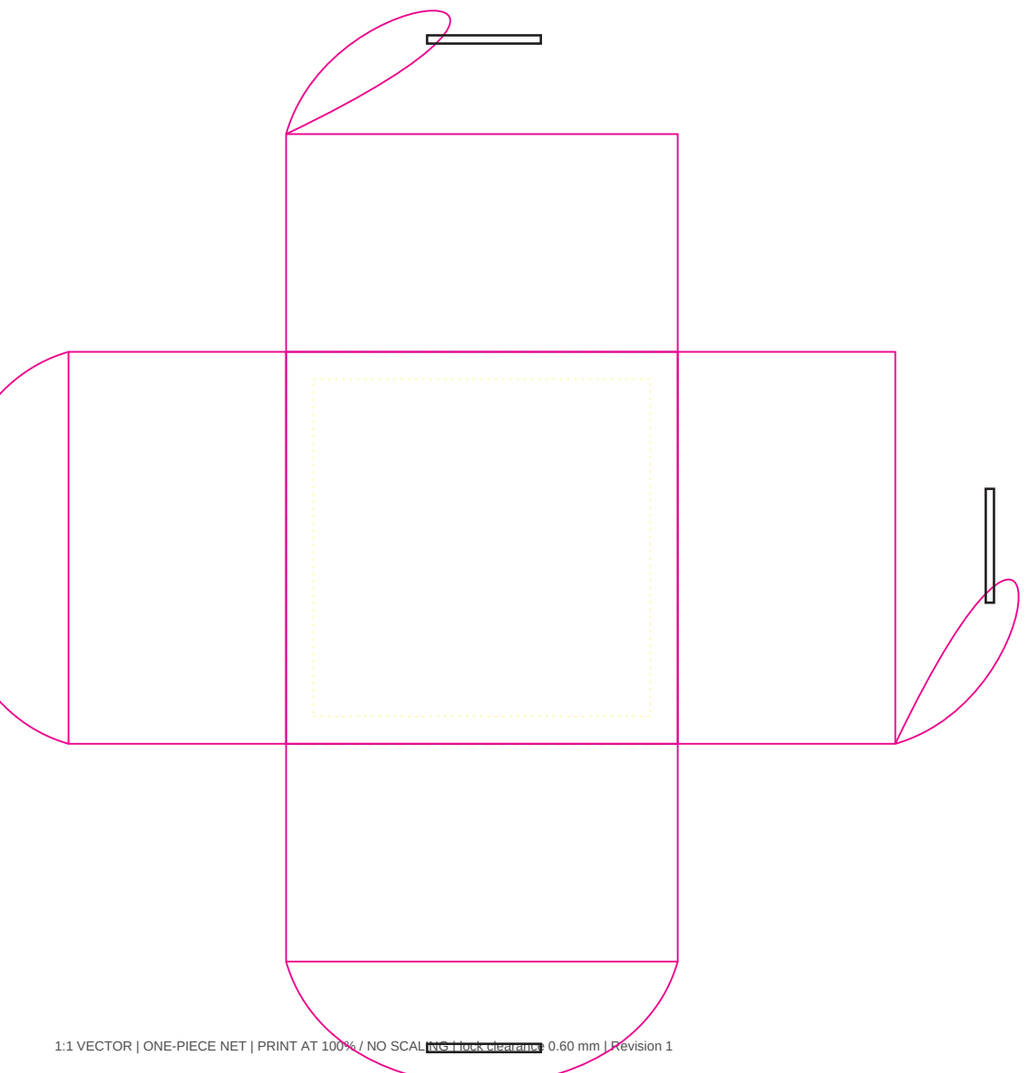

1:1 VECTOR | ONE-PIECE NET | PRINT AT 100% / NO SCALING | lock clearance 0.60 mm | Revision 1

ASSEMBLED PRODUCT REFERENCE

FINISHED INTERNAL SIZE

2.25 x 2.25 x 1.25 in

57.1 x 57.1 x 31.8 mm

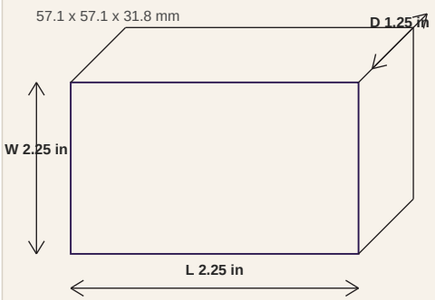

CUT

CREASE

SLOT / PUNCH

GLUE ZONE

Material: 350 GSM card

Working caliper: 0.45 mm

Lock clearance: 0.60 mm

Dimensions are INTERNAL

Print/cut at 100% only

50 mm calibration bar

Self-Lock Petal Box

2.75 x 2.75 x 1.5 in internal | 350 GSM | caliper 0.45 mm

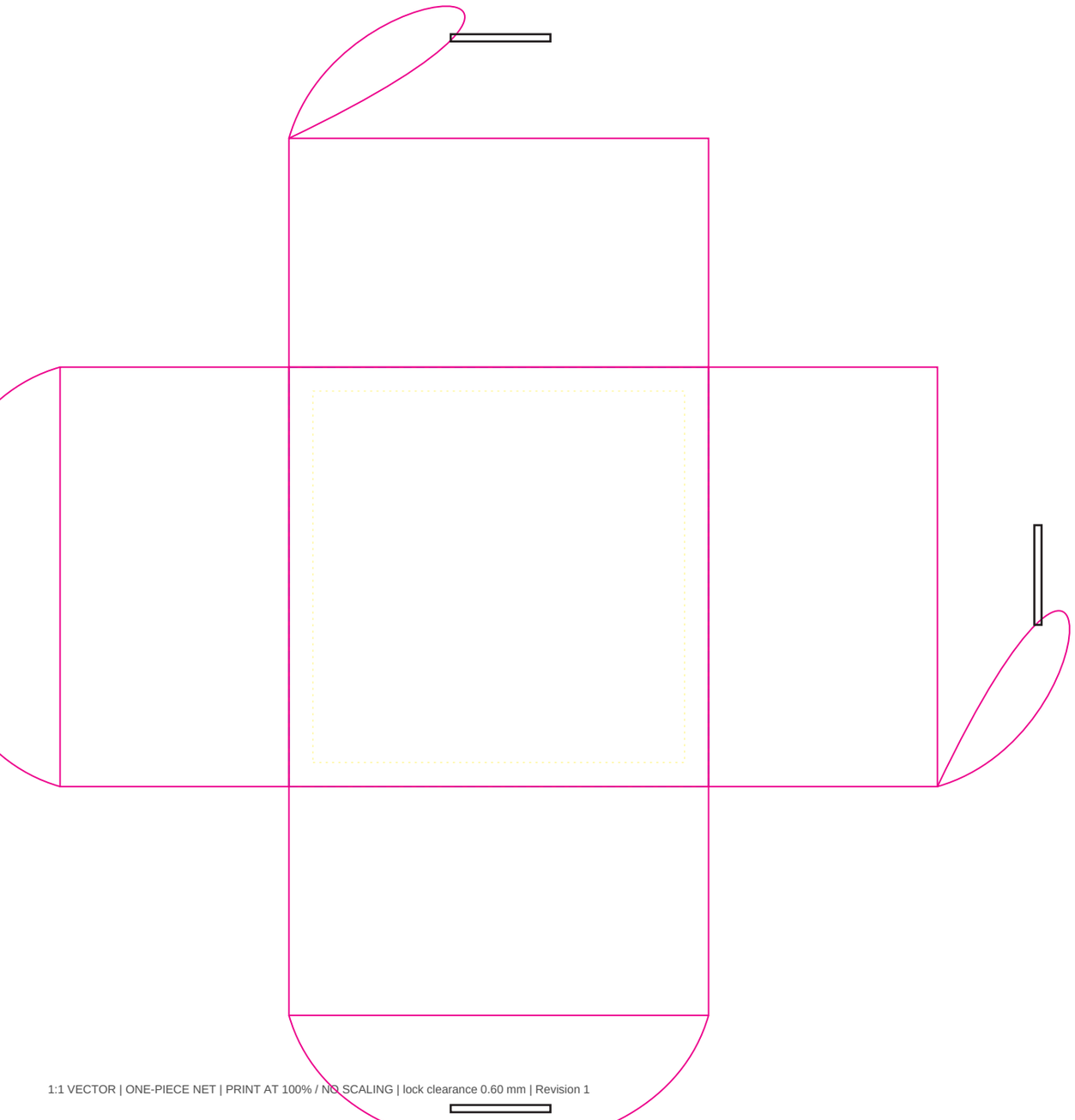

1:1 VECTOR | ONE-PIECE NET | PRINT AT 100% / NO SCALING | lock clearance 0.60 mm | Revision 1

ASSEMBLED PRODUCT REFERENCE

FINISHED INTERNAL SIZE

2.75 x 2.75 x 1.5 in

69.8 x 69.8 x 38.1 mm

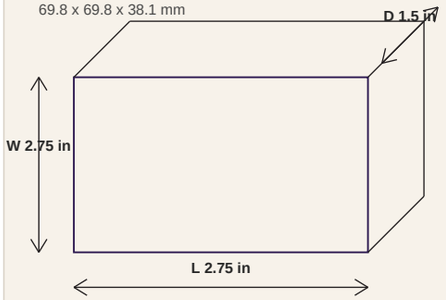

CUT

CREASE

SLOT / PUNCH

GLUE ZONE

Material: 350 GSM card

Working caliper: 0.45 mm

Lock clearance: 0.60 mm

Dimensions are INTERNAL

Print/cut at 100% only

50 mm calibration bar

Self-Lock Petal Box

3.25 x 3.25 x 1.75 in internal | 350 GSM | caliper 0.45 mm

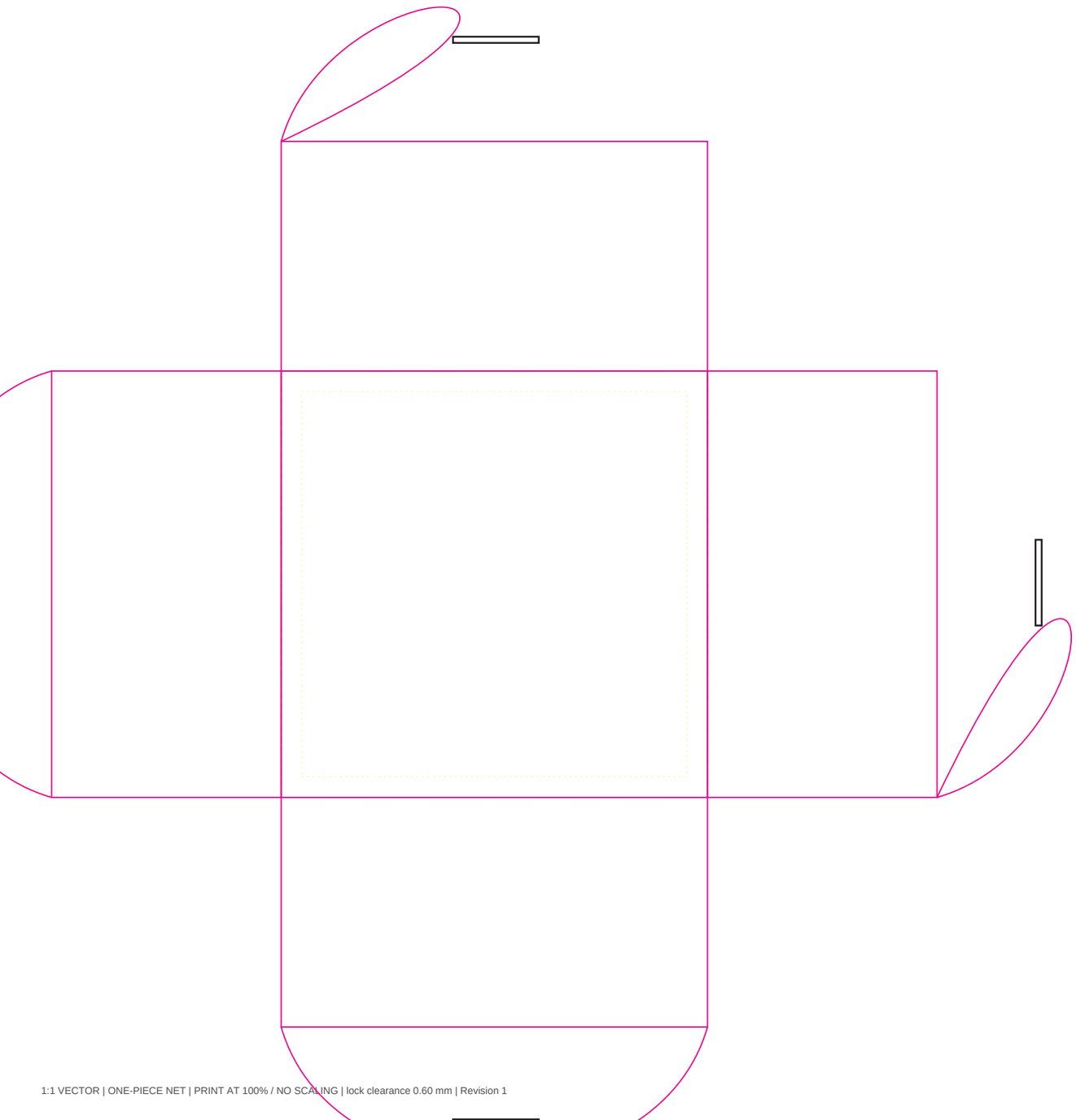

1:1 VECTOR | ONE-PIECE NET | PRINT AT 100% / NO SCALING | lock clearance 0.60 mm | Revision 1

ASSEMBLED PRODUCT REFERENCE

FINISHED INTERNAL SIZE

3.25 x 3.25 x 1.75 in

82.5 x 82.5 x 44.4 mm

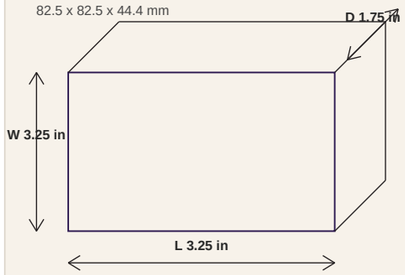

CUT

CREASE

SLOT / PUNCH

GLUE ZONE

Material: 350 GSM card

Working caliper: 0.45 mm

Lock clearance: 0.60 mm

Dimensions are INTERNAL

Print/cut at 100% only

50 mm calibration bar

Ribbon Pillow Box

3.5 x 2.5 x 1 in internal | 350 GSM | caliper 0.45 mm

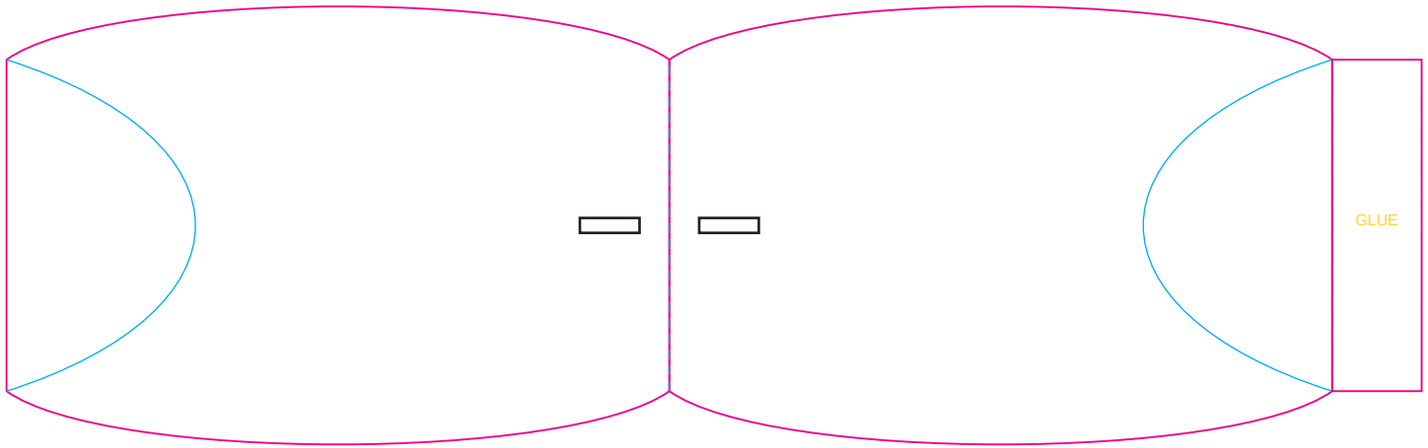

ASSEMBLED PRODUCT REFERENCE

FINISHED INTERNAL SIZE

3.5 x 2.5 x 1 in

88.9 x 63.5 x 25.4 mm

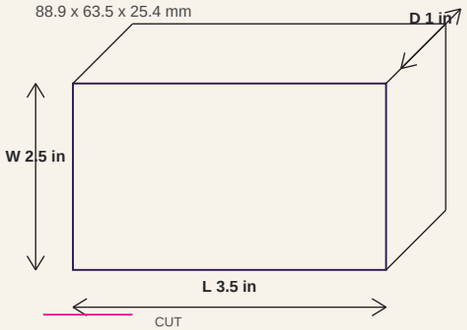

CUT

CREASE

SLOT / PUNCH

GLUE ZONE

Material: 350 GSM card

Working caliper: 0.45 mm

Lock clearance: 0.60 mm

Dimensions are INTERNAL

Print/cut at 100% only

50 mm calibration bar

1:1 VECTOR | ONE-PIECE NET | PRINT AT 100% / NO SCALING | lock clearance 0.60 mm | Revision 1

Ribbon Pillow Box

4.5 x 3 x 1.25 in internal | 350 GSM | caliper 0.45 mm

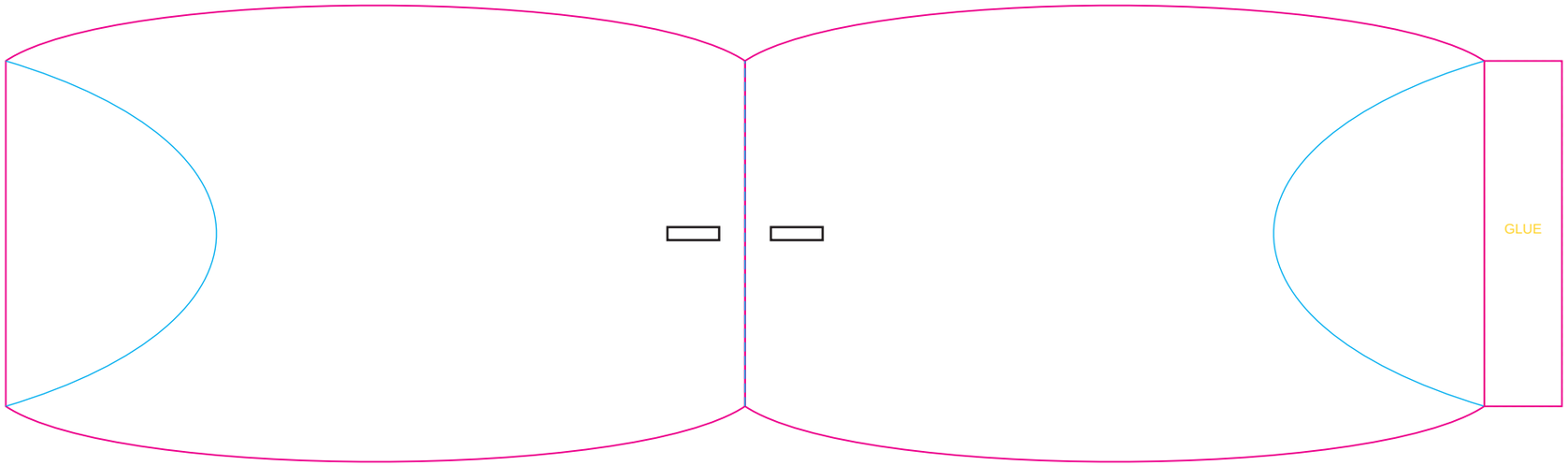

ASSEMBLED PRODUCT REFERENCE

FINISHED INTERNAL SIZE

4.5 x 3 x 1.25 in

114.3 x 76.2 x 31.8 mm

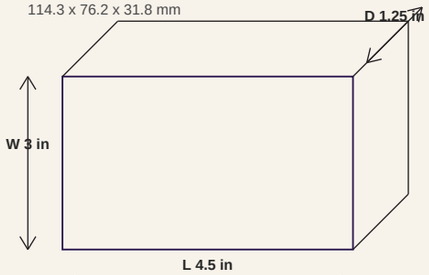

CUT

CREASE

SLOT / PUNCH

GLUE ZONE

Material: 350 GSM card

Working caliper: 0.45 mm

Lock clearance: 0.60 mm

Dimensions are INTERNAL

Print/cut at 100% only

50 mm calibration bar

1:1 VECTOR | ONE-PIECE NET | PRINT AT 100% / NO SCALING | lock clearance 0.60 mm | Revision 1

Ribbon Pillow Box

5.5 x 3.5 x 1.5 in internal | 350 GSM | caliper 0.45 mm

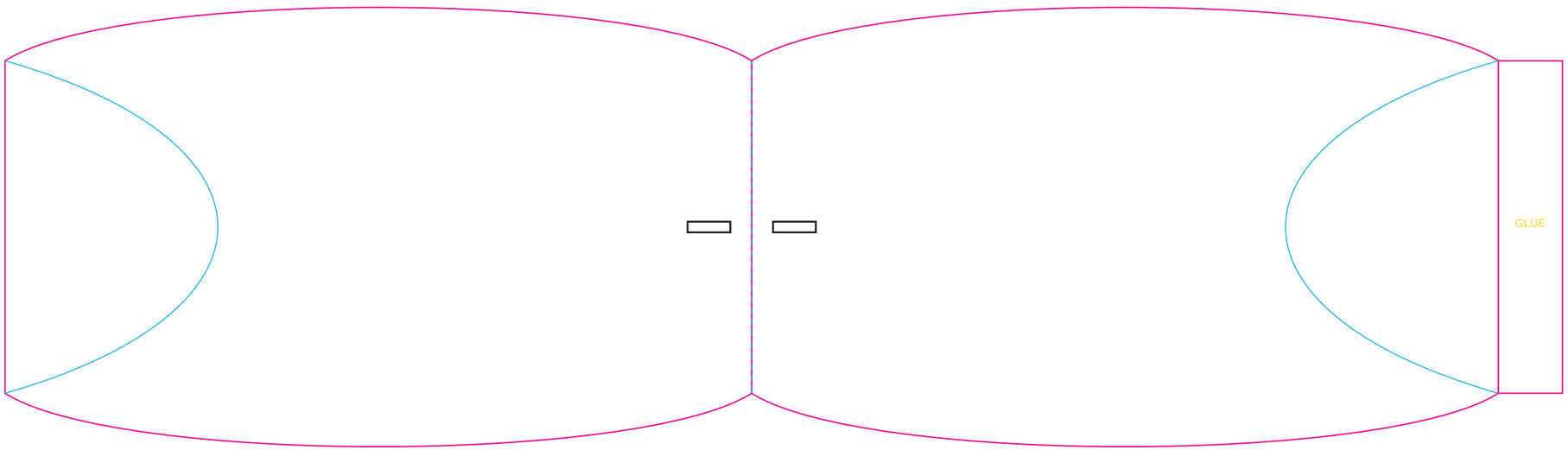

ASSEMBLED PRODUCT REFERENCE

FINISHED INTERNAL SIZE

5.5 x 3.5 x 1.5 in

139.7 x 88.9 x 38.1 mm

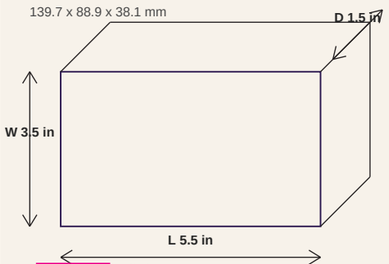

CUT

CREASE

SLOT / PUNCH

GLUE ZONE

Material: 350 GSM card

Working caliper: 0.45 mm

Lock clearance: 0.60 mm

Dimensions are INTERNAL

Print/cut at 100% only

50 mm calibration bar

1:1 VECTOR | ONE-PIECE NET | PRINT AT 100% / NO SCALING | lock clearance 0.60 mm | Revision 1

Card Drawer Sleeve Box

2.5 x 2.5 x 1 in internal | 350 GSM | caliper 0.45 mm

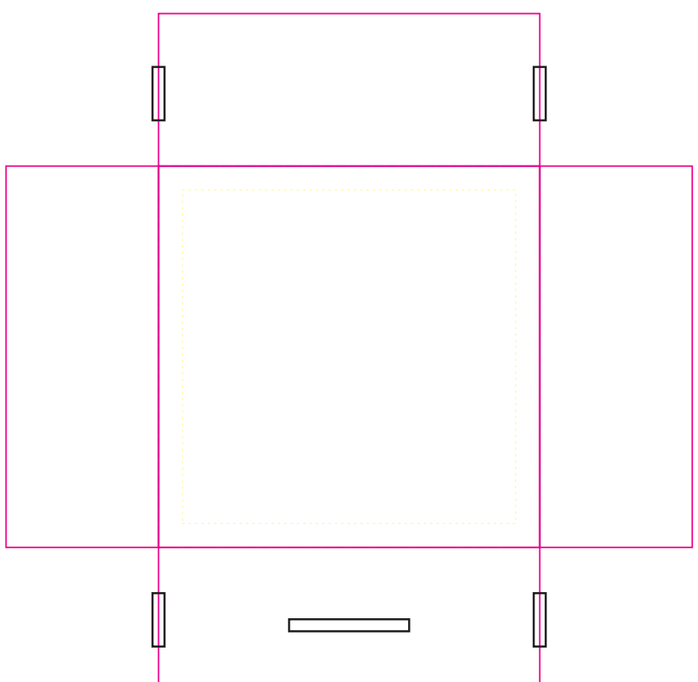

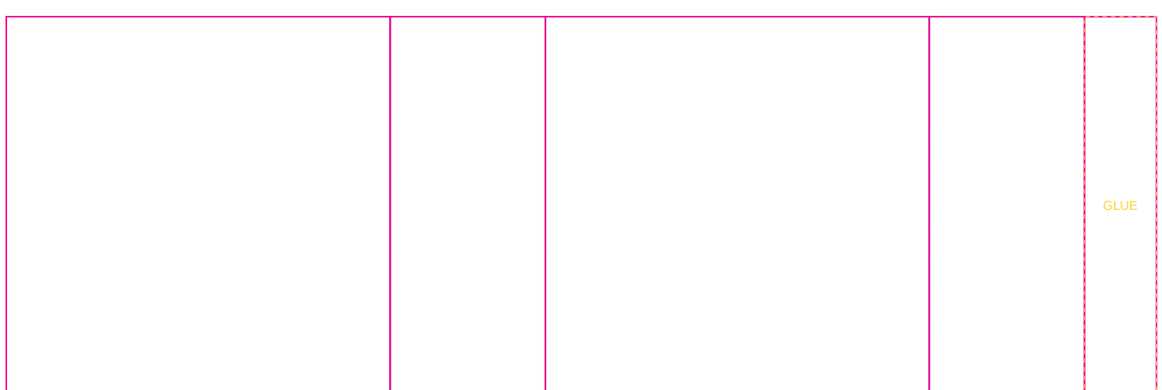

ASSEMBLED PRODUCT REFERENCE

FINISHED INTERNAL SIZE

2.5 x 2.5 x 1 in

63.5 x 63.5 x 25.4 mm

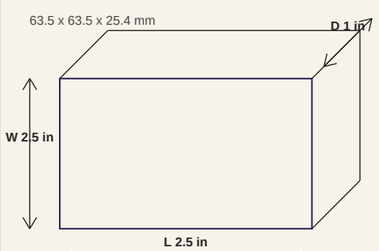

Material: 350 GSM card

Working caliper: 0.45 mm

Lock clearance: 0.60 mm

Dimensions are INTERNAL

Print/cut at 100% only

50 mm calibration bar

1:1 VECTOR | ONE-PIECE NET | PRINT AT 100% / NO SCALING | lock clearance 0.60 mm | Revision 1

Card Drawer Sleeve Box

3 x 3 x 1.25 in internal | 350 GSM | caliper 0.45 mm

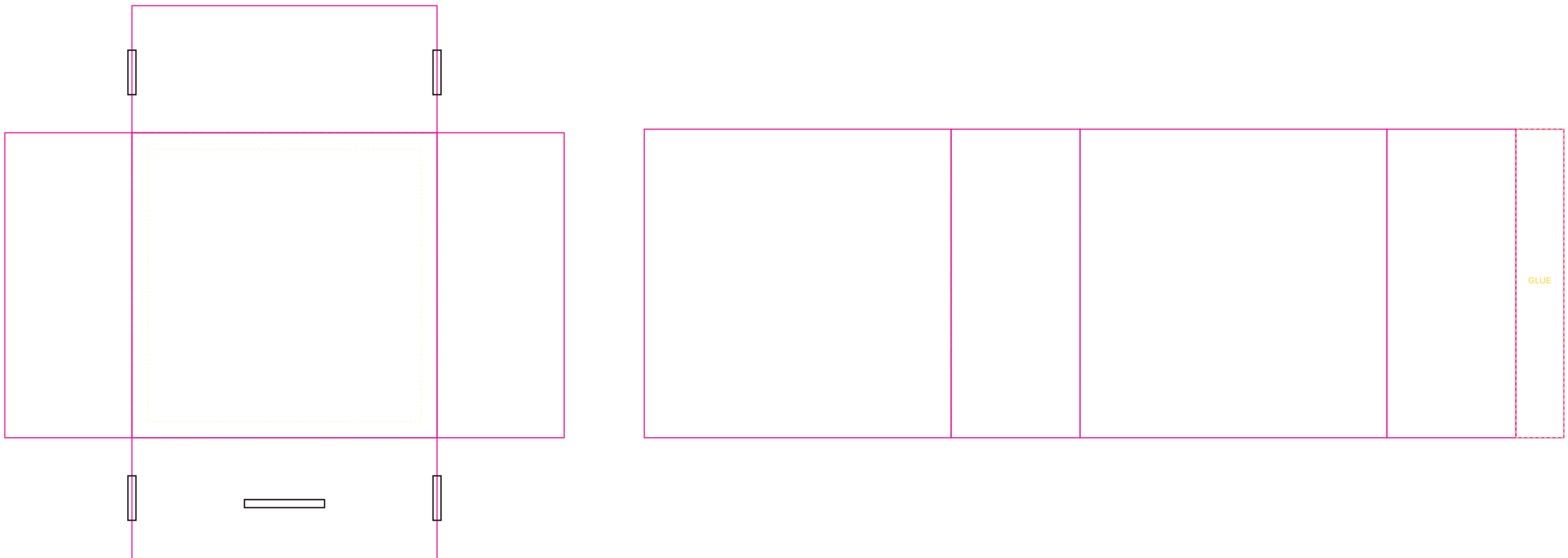

ASSEMBLED PRODUCT REFERENCE

FINISHED INTERNAL SIZE

3 x 3 x 1.25 in

76.2 x 76.2 x 31.8 mm

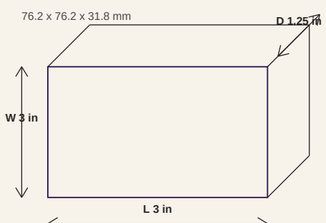

CUT

CREASE

SLOT / PUNCH

GLUE ZONE

Material: 350 GSM card

Working caliper: 0.45 mm

Lock clearance: 0.60 mm

Dimensions are INTERNAL

Print/cut at 100% only

50 mm calibration bar

1:1 VECTOR | ONE-PIECE NET | PRINT AT 100% / NO SCALING | lock clearance 0.60 mm | Revision 1

Card Drawer Sleeve Box

4 x 3 x 1.25 in internal | 350 GSM | caliper 0.45 mm

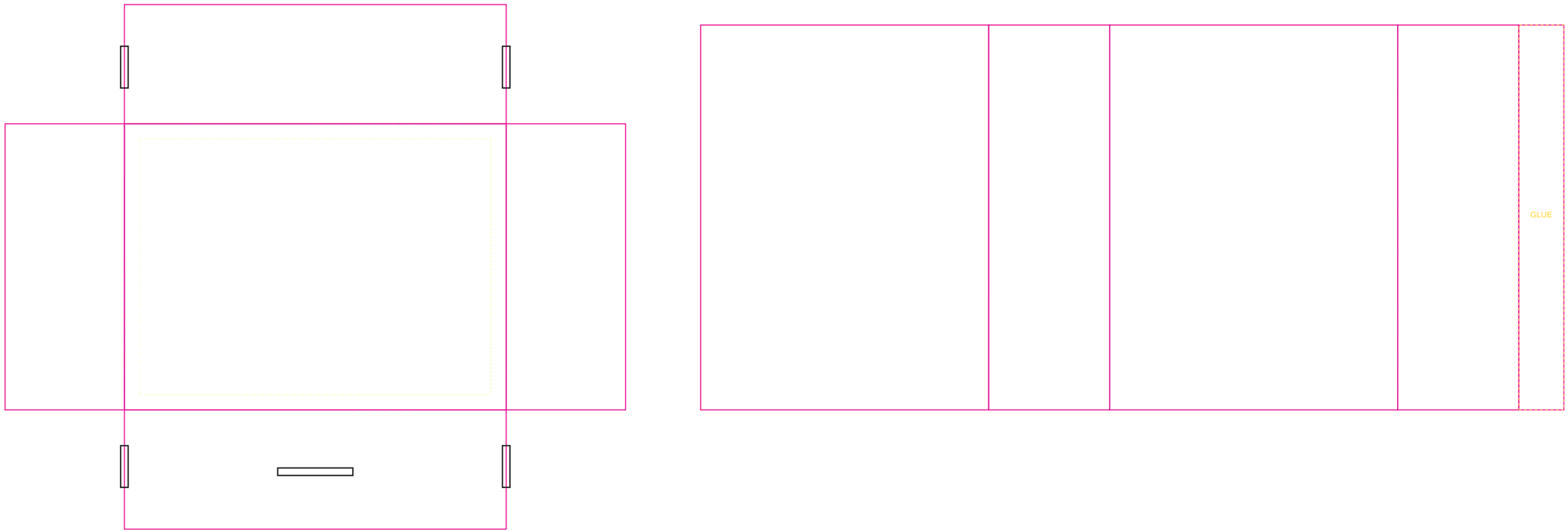

ASSEMBLED PRODUCT REFERENCE

FINISHED INTERNAL SIZE

4 x 3 x 1.25 in

101.6 x 76.2 x 31.8 mm

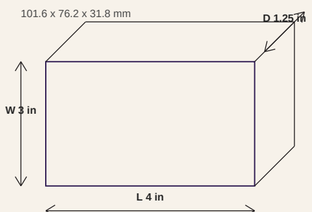

CUT

CREASE

SLOT / PUNCH

GLUE ZONE

Material: 350 GSM card

Working caliper: 0.45 mm

Lock clearance: 0.60 mm

Dimensions are INTERNAL

Print/cut at 100% only

50 mm calibration bar

1:1 VECTOR | ONE-PIECE NET | PRINT AT 100% / NO SCALING | lock clearance 0.60 mm | Revision 1

Self-Lock Necklace Box

4 x 4 x 0.75 in internal | 350 GSM | caliper 0.45 mm

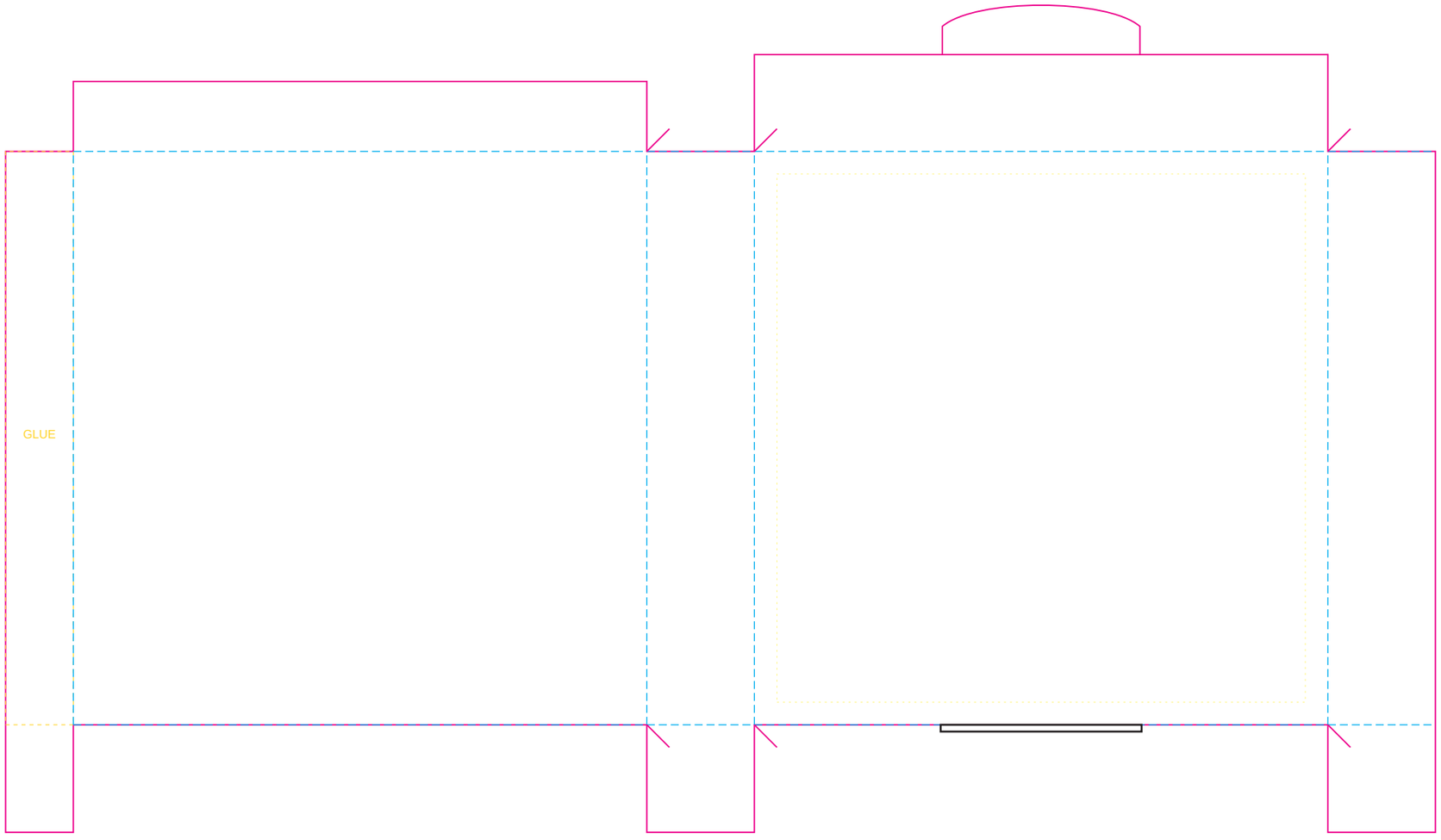

ASSEMBLED PRODUCT REFERENCE

FINISHED INTERNAL SIZE

4 x 4 x 0.75 in

101.6 x 101.6 x 19.0 mm

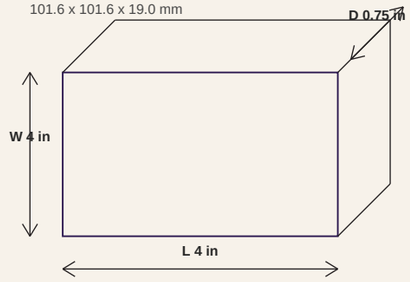

CUT

CREASE

SLOT / PUNCH

GLUE ZONE

Material: 350 GSM card

Working caliper: 0.45 mm

Lock clearance: 0.60 mm

Dimensions are INTERNAL

Print/cut at 100% only

50 mm calibration bar

1:1 VECTOR | ONE-PIECE NET | PRINT AT 100% / NO SCALING | lock clearance 0.60 mm | Revision 1

Self-Lock Necklace Box

5 x 4 x 1 in internal | 350 GSM | caliper 0.45 mm

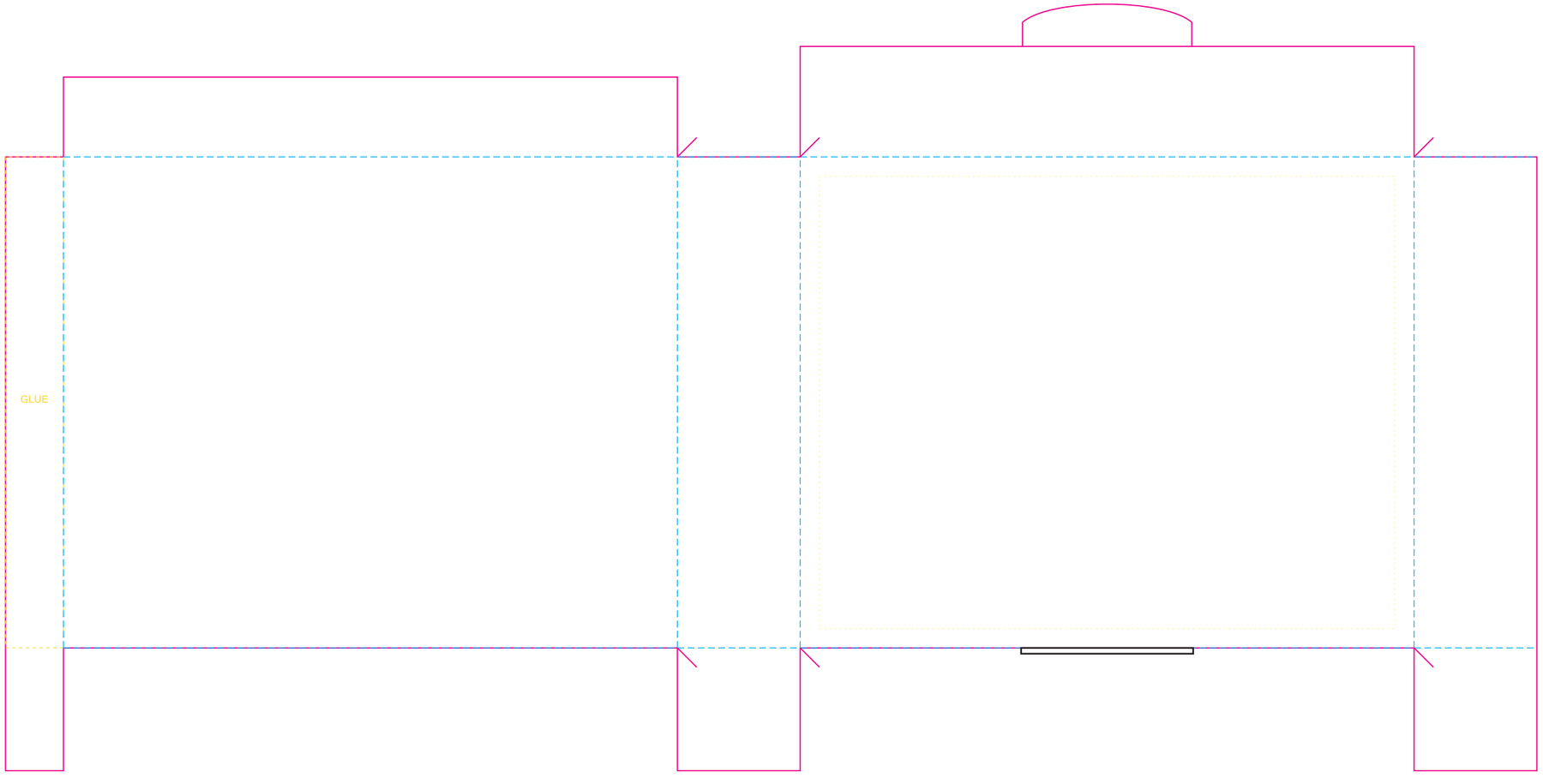

ASSEMBLED PRODUCT REFERENCE

FINISHED INTERNAL SIZE

5 x 4 x 1 in

127.0 x 101.6 x 25.4 mm

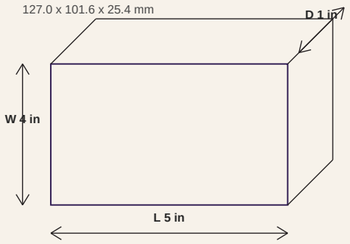

CUT

CREASE

SLOT / PUNCH

GLUE ZONE

Material: 350 GSM card

Working caliper: 0.45 mm

Lock clearance: 0.60 mm

Dimensions are INTERNAL

Print/cut at 100% only

50 mm calibration bar

1:1 VECTOR | ONE-PIECE NET | PRINT AT 100% / NO SCALING | lock clearance 0.60 mm | Revision 1

Self-Lock Necklace Box

6 x 5 x 1 in internal | 350 GSM | caliper 0.45 mm

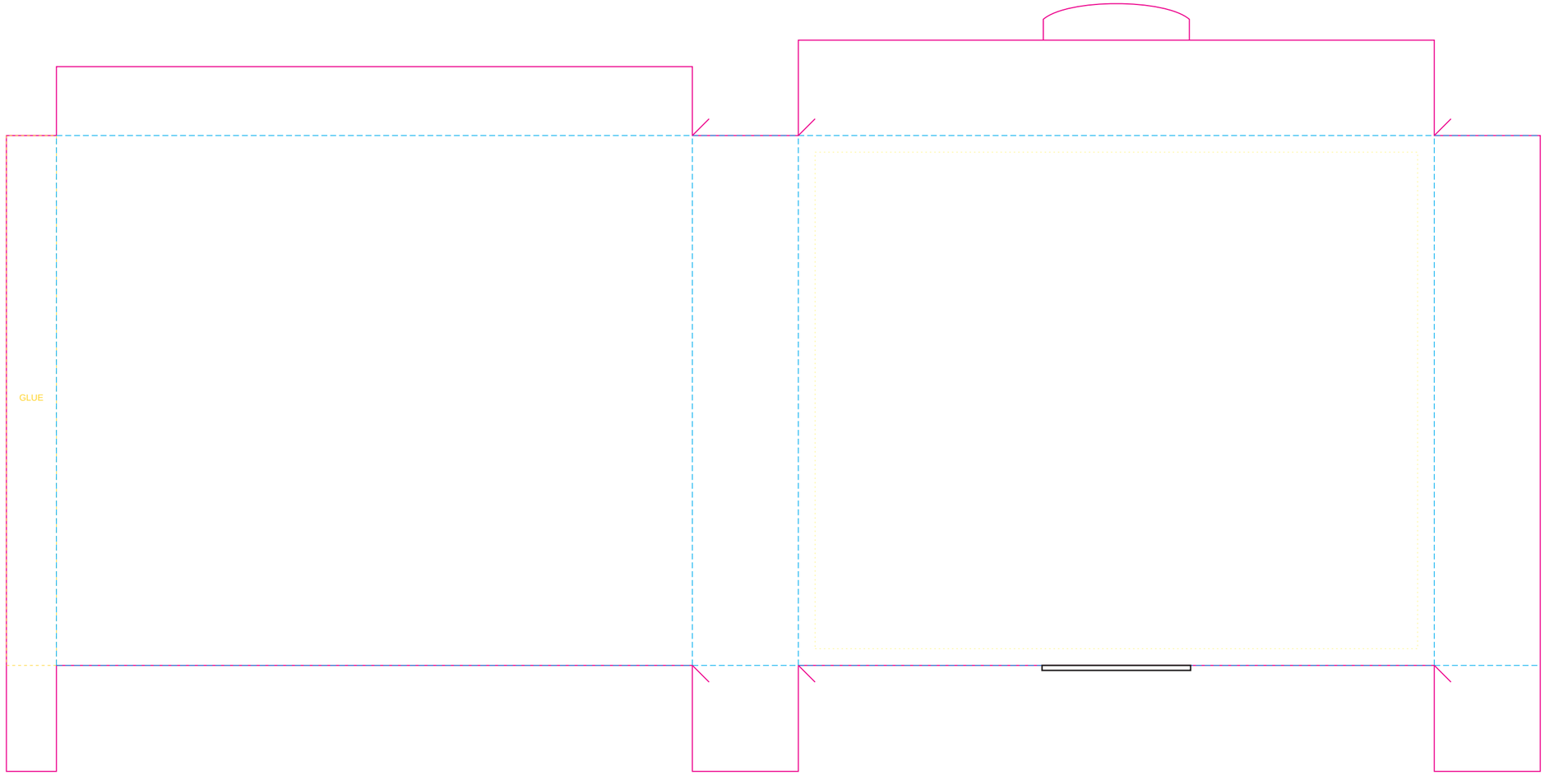

ASSEMBLED PRODUCT REFERENCE

FINISHED INTERNAL SIZE

6 x 5 x 1 in

152.4 x 127.0 x 25.4 mm

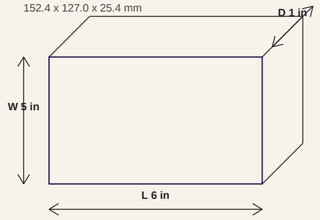

CUT

CREASE

SLOT / PUNCH

GLUE ZONE

Material: 350 GSM card

Working caliper: 0.45 mm

Lock clearance: 0.60 mm

Dimensions are INTERNAL

Print/cut at 100% only

50 mm calibration bar

1:1 VECTOR | ONE-PIECE NET | PRINT AT 100% / NO SCALING | lock clearance 0.60 mm | Revision 1

Book-Style Ribbon Box

4 x 3 x 1 in internal | 350 GSM | caliper 0.45 mm

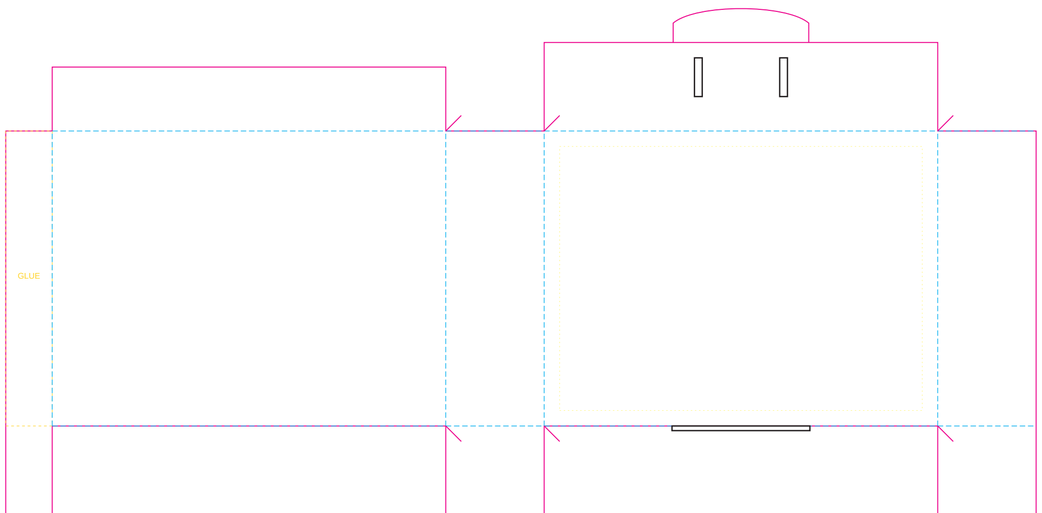

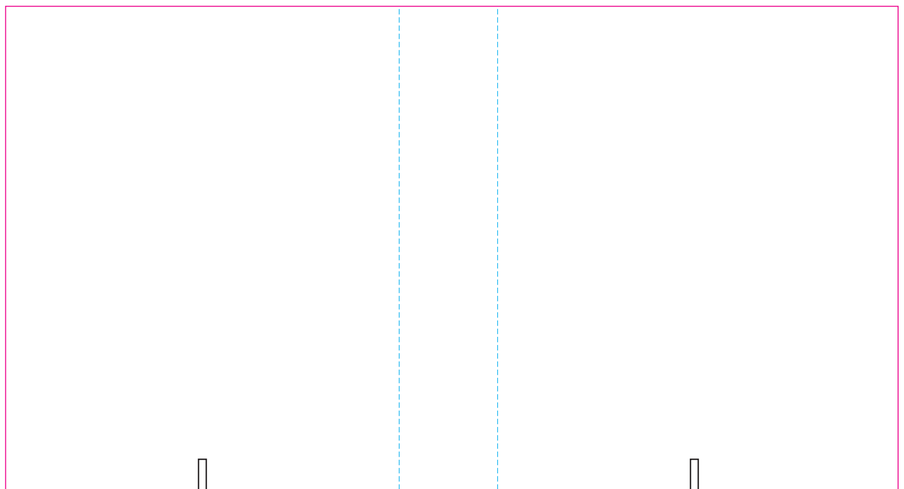

ASSEMBLED PRODUCT REFERENCE

FINISHED INTERNAL SIZE

4 x 3 x 1 in

101.6 x 76.2 x 25.4 mm

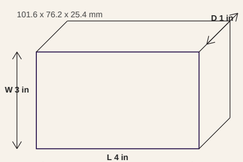

CUT

CREASE

SLOT / PUNCH

GLUE ZONE

Material: 350 GSM card

Working caliper: 0.45 mm

Lock clearance: 0.60 mm

Dimensions are INTERNAL

Print/cut at 100% only

50 mm calibration bar

1:1 VECTOR | ONE-PIECE NET | PRINT AT 100% / NO SCALING | lock clearance 0.60 mm | Revision 1

Book-Style Ribbon Box

5 x 4 x 1.25 in internal | 350 GSM | caliper 0.45 mm

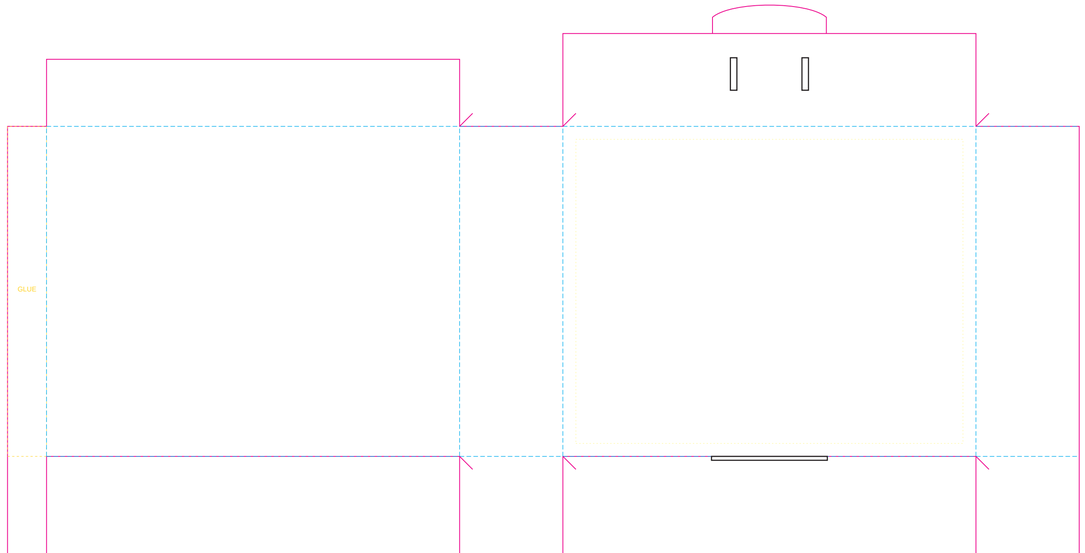

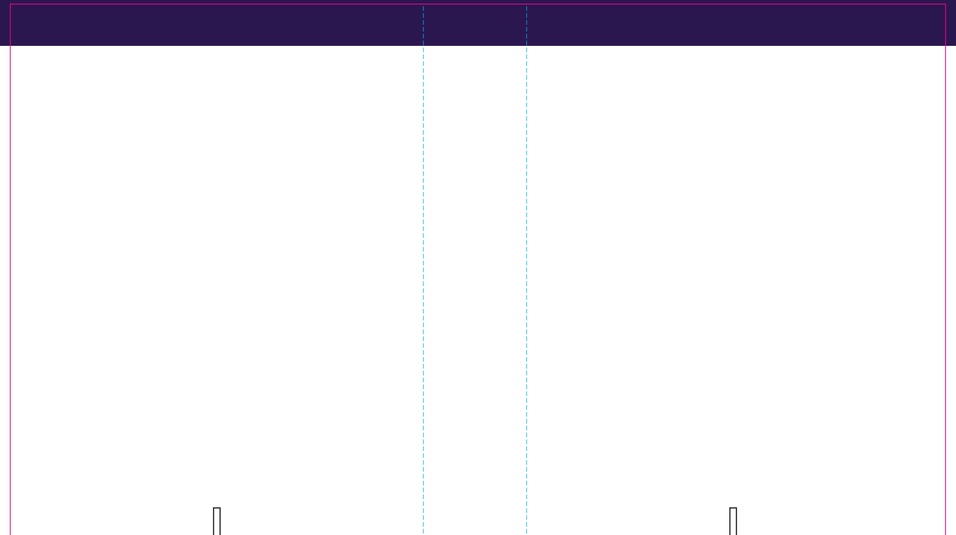

ASSEMBLED PRODUCT REFERENCE

FINISHED INTERNAL SIZE

5 x 4 x 1.25 in

127.0 x 101.6 x 31.8 mm

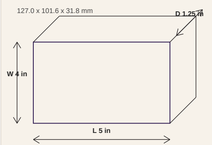

CUT

CREASE

SLOT / PUNCH

GLUE ZONE

Material: 350 GSM card

Working caliper: 0.45 mm

Lock clearance: 0.60 mm

Dimensions are INTERNAL

Print/cut at 100% only

50 mm calibration bar

1:1 VECTOR | ONE-PIECE NET | PRINT AT 100% / NO SCALING | lock clearance 0.60 mm | Revision 1

Book-Style Ribbon Box

6 x 5 x 1.5 in internal | 350 GSM | caliper 0.45 mm

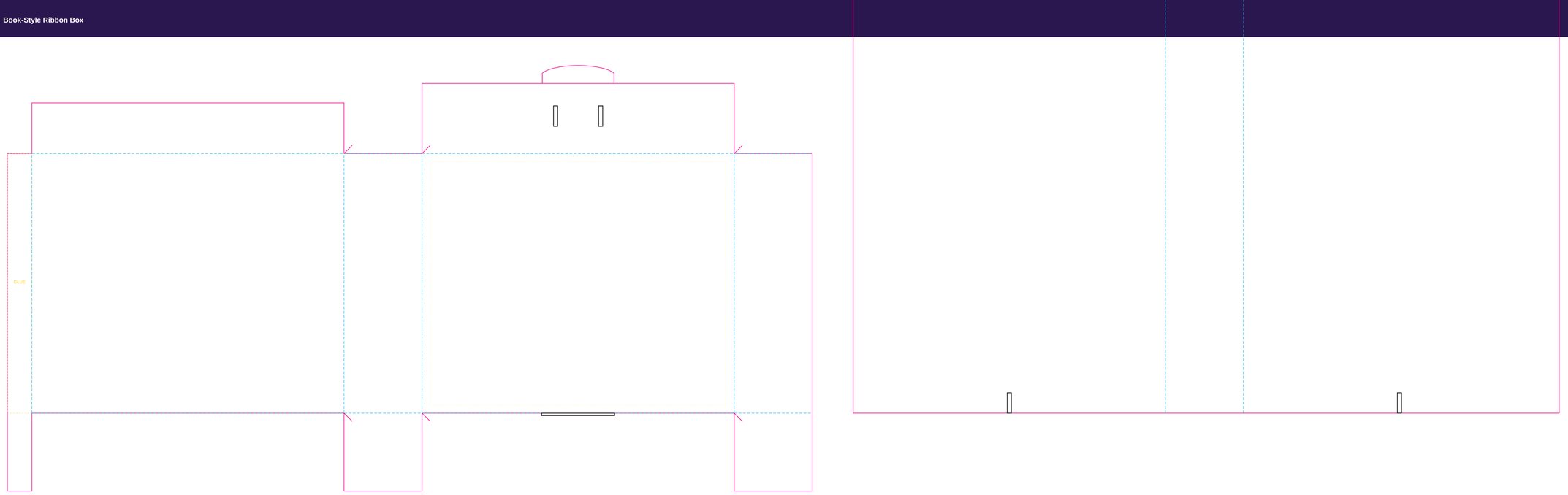

ASSEMBLED PRODUCT REFERENCE

FINISHED INTERNAL SIZE

6 x 5 x 1.5 in

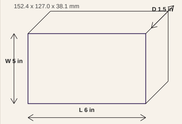

CUT

CREASE

SLOT / PUNCH

GLUE ZONE

Material: 350 GSM card

Working caliper: 0.45 mm

Lock clearance: 0.60 mm

Dimensions are INTERNAL

Print/cut at 100% only

50 mm calibration bar

1:1 VECTOR | ONE-PIECE NET | PRINT AT 100% / NO SCALING | lock clearance 0.60 mm | Revision 1

Self-Lock Mailer Gift-Set Box

5 x 5 x 1.5 in internal | 350 GSM | caliper 0.45 mm

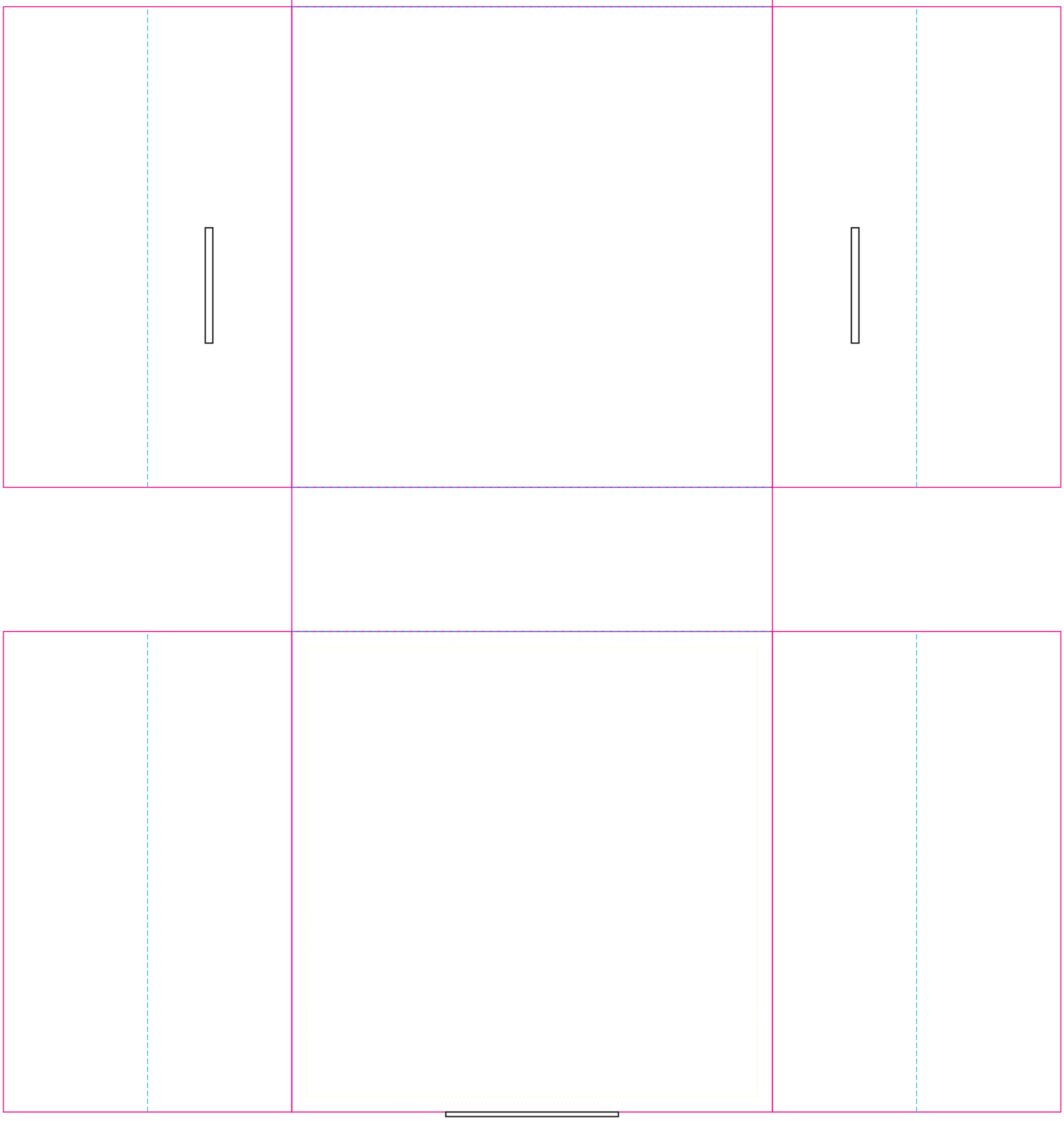

ASSEMBLED PRODUCT REFERENCE

FINISHED INTERNAL SIZE

5 x 5 x 1.5 in

127.0 x 127.0 x 38.1 mm

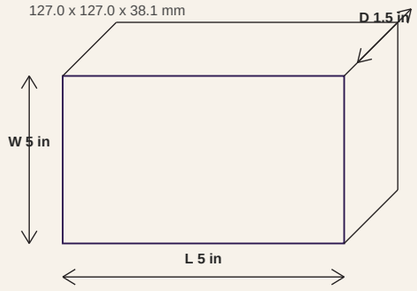

CUT

CREASE

SLOT / PUNCH

GLUE ZONE

Material: 350 GSM card

Working caliper: 0.45 mm

Lock clearance: 0.60 mm

Dimensions are INTERNAL

Print/cut at 100% only

50 mm calibration bar

1:1 VECTOR | ONE-PIECE NET | PRINT AT 100% / NO SCALING | lock clearance 0.60 mm | Revision 1

Self-Lock Mailer Gift-Set Box

6 x 6 x 2 in internal | 350 GSM | caliper 0.45 mm

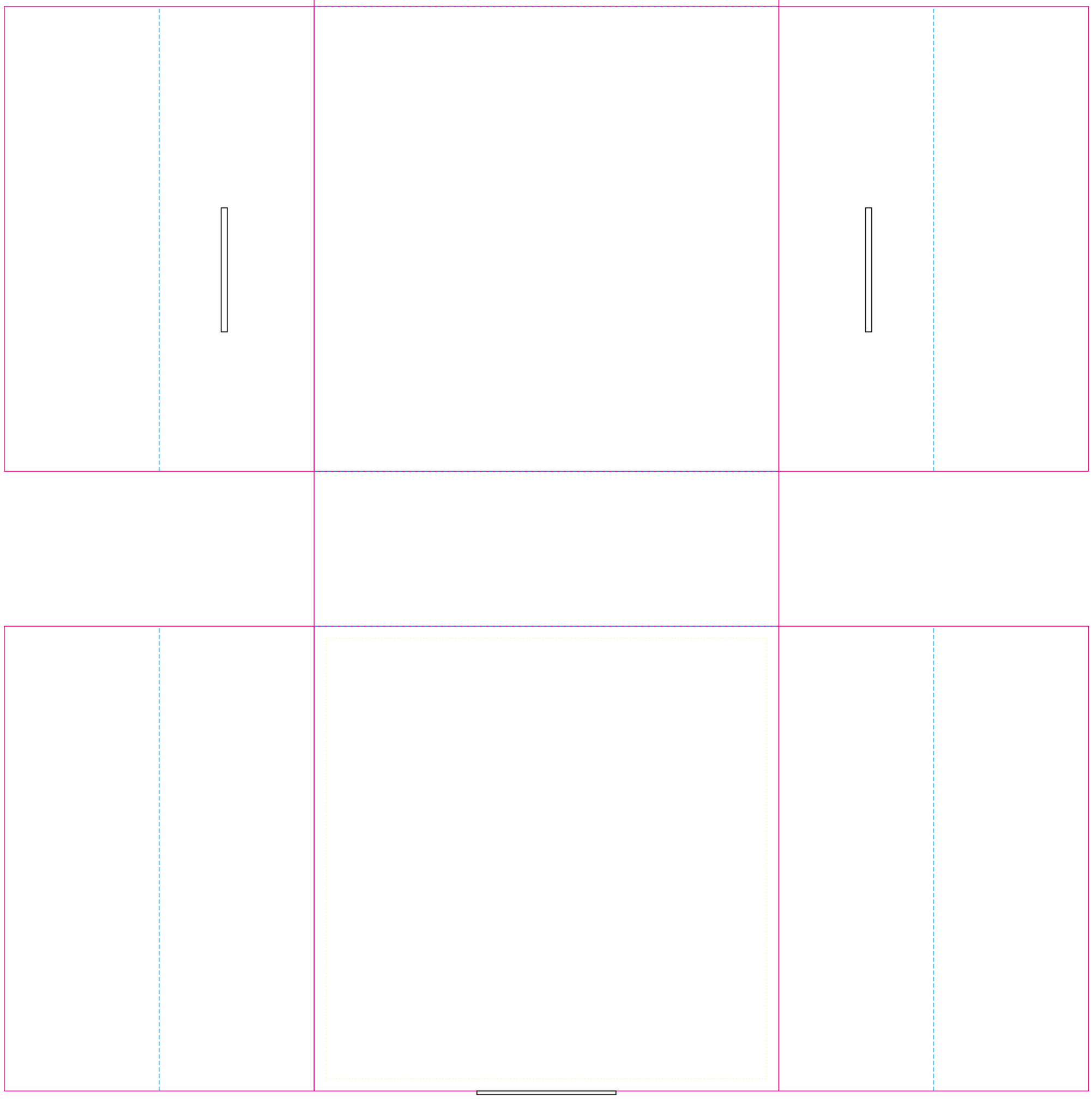

ASSEMBLED PRODUCT REFERENCE

FINISHED INTERNAL SIZE

6 x 6 x 2 in

152.4 x 152.4 x 50.8 mm

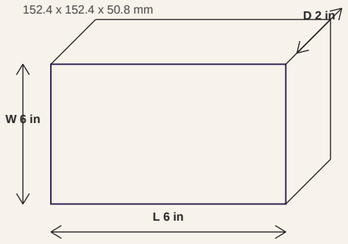

CUT

CREASE

SLOT / PUNCH

GLUE ZONE

Material: 350 GSM card

Working caliper: 0.45 mm

Lock clearance: 0.60 mm

Dimensions are INTERNAL

Print/cut at 100% only

50 mm calibration bar

Self-Lock Mailer Gift-Set Box

8 x 6 x 2 in internal | 350 GSM | caliper 0.45 mm

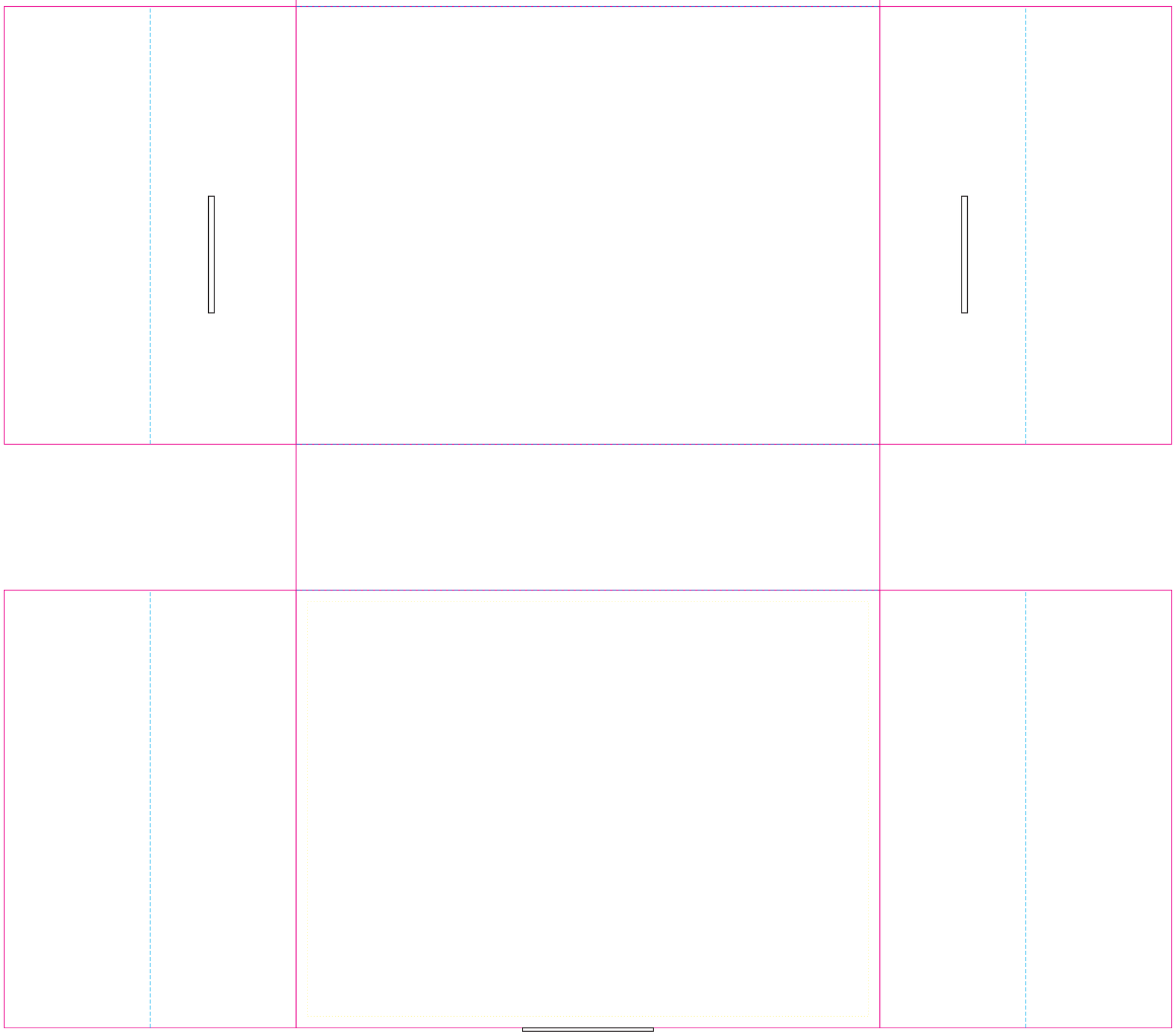

ASSEMBLED PRODUCT REFERENCE

FINISHED INTERNAL SIZE

8 x 6 x 2 in

203.2 x 152.4 x 50.8 mm

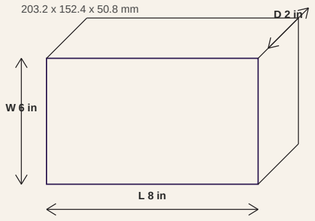

CUT

CREASE

SLOT / PUNCH

GLUE ZONE

Material: 350 GSM card

Working caliper: 0.45 mm

Lock clearance: 0.60 mm

Dimensions are INTERNAL

Print/cut at 100% only

50 mm calibration bar

1:1 VECTOR | ONE-PIECE NET | PRINT AT 100% / NO SCALING | lock clearance 0.60 mm | Revision 1

Envelope Jewellery Box

3.5 x 3.5 x 0.5 in internal | 350 GSM | caliper 0.45 mm

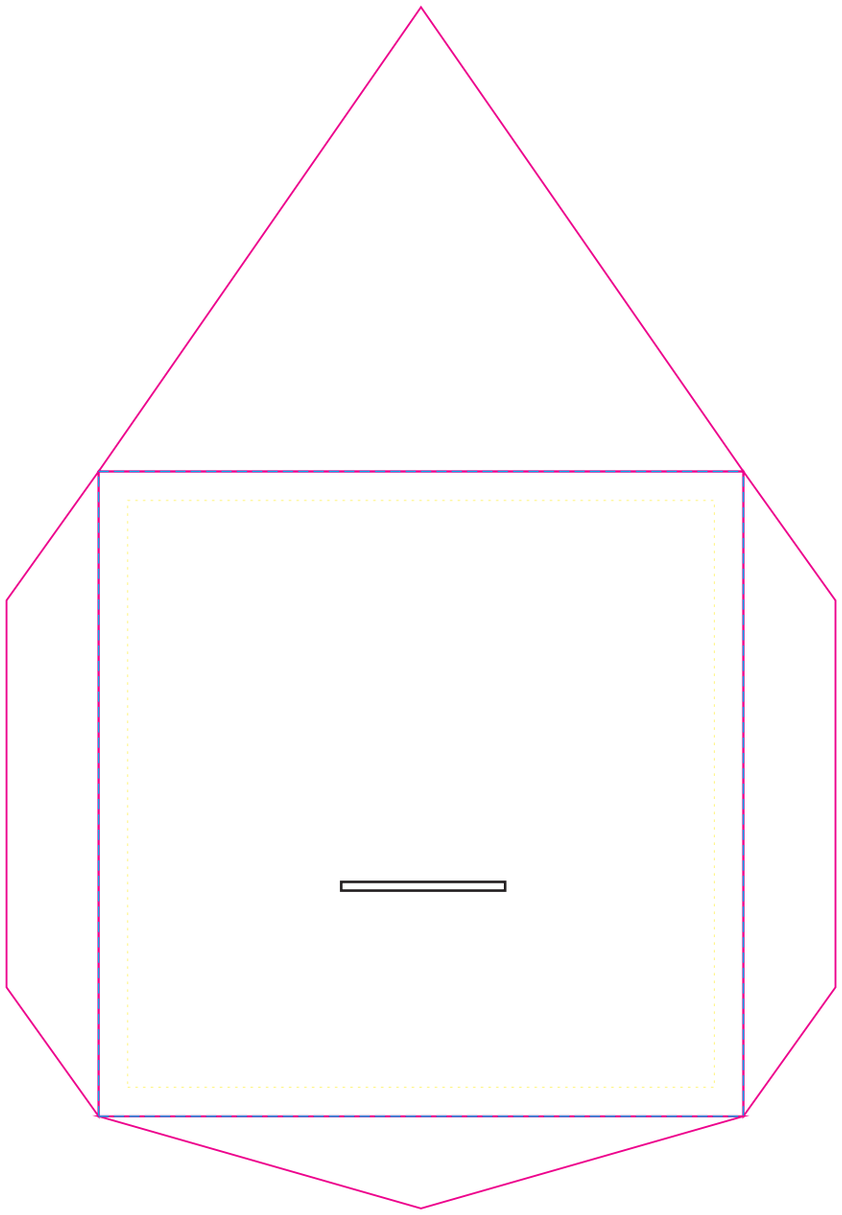

ASSEMBLED PRODUCT REFERENCE

FINISHED INTERNAL SIZE

3.5 x 3.5 x 0.5 in

88.9 x 88.9 x 12.7 mm

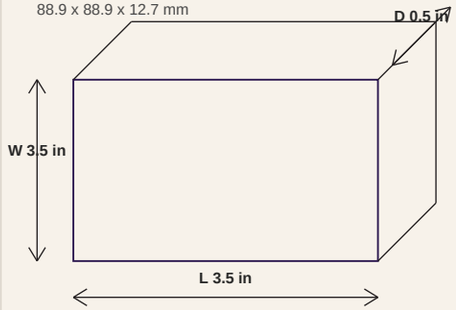

CUT

CREASE

SLOT / PUNCH

GLUE ZONE

Material: 350 GSM card

Working caliper: 0.45 mm

Lock clearance: 0.60 mm

Dimensions are INTERNAL

Print/cut at 100% only

50 mm calibration bar

1:1 VECTOR | ONE-PIECE NET | PRINT AT 100% / NO SCALING | lock clearance 0.60 mm | Revision 1

Envelope Jewellery Box

4 x 4 x 0.6 in internal | 350 GSM | caliper 0.45 mm

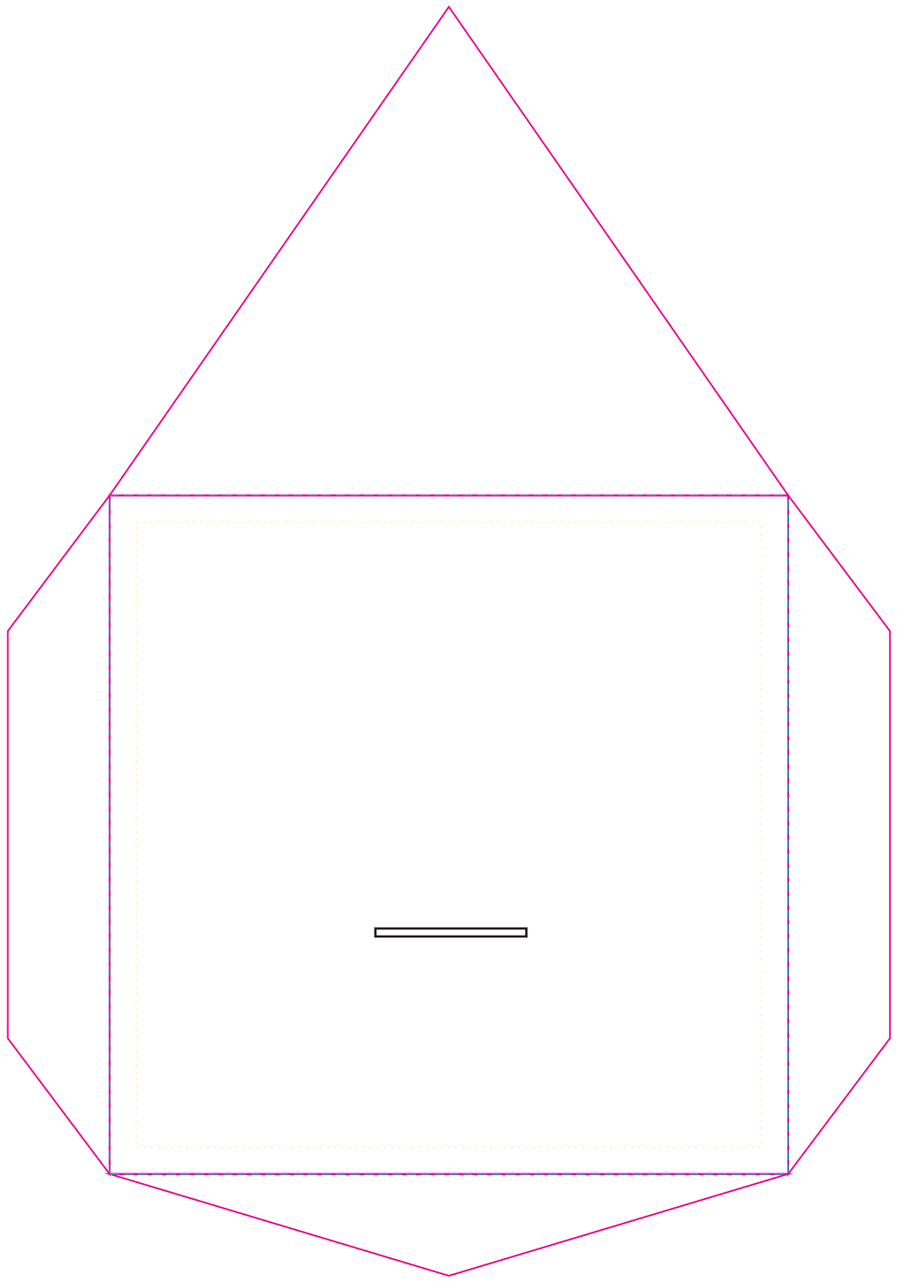

ASSEMBLED PRODUCT REFERENCE

FINISHED INTERNAL SIZE

4 x 4 x 0.6 in

101.6 x 101.6 x 15.2 mm

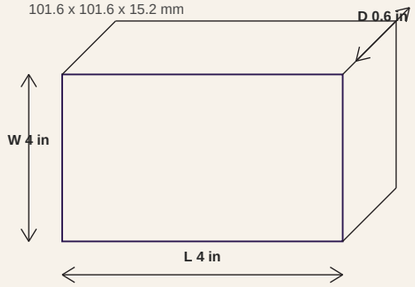

CUT

CREASE

SLOT / PUNCH

GLUE ZONE

Material: 350 GSM card

Working caliper: 0.45 mm

Lock clearance: 0.60 mm

Dimensions are INTERNAL

Print/cut at 100% only

50 mm calibration bar

1:1 VECTOR | ONE-PIECE NET | PRINT AT 100% / NO SCALING | lock clearance 0.60 mm | Revision 1

Envelope Jewellery Box

5 x 4 x 0.75 in internal | 350 GSM | caliper 0.45 mm

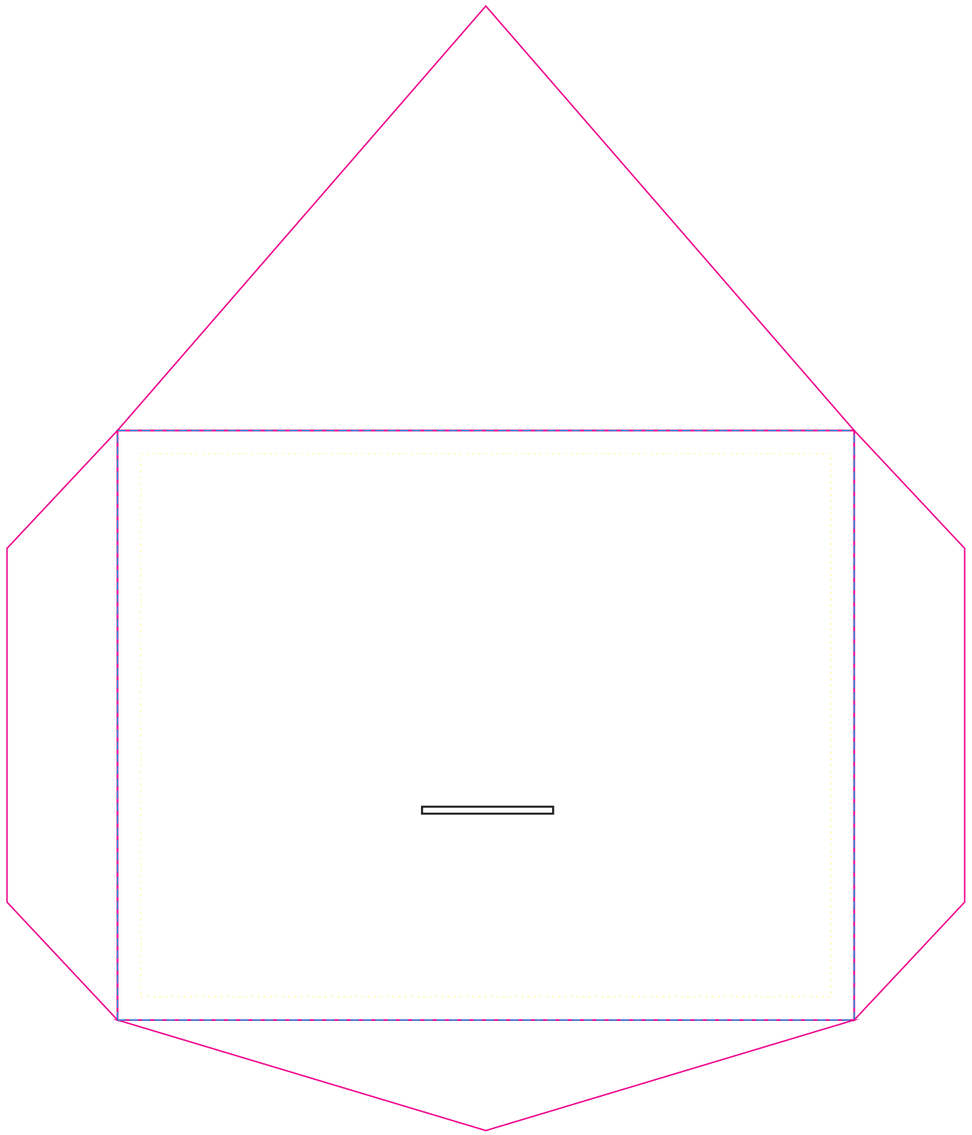

ASSEMBLED PRODUCT REFERENCE

FINISHED INTERNAL SIZE

5 x 4 x 0.75 in

127.0 x 101.6 x 19.0 mm

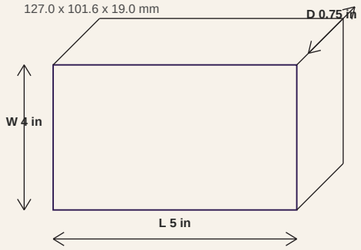

CUT

CREASE

SLOT / PUNCH

GLUE ZONE

Material: 350 GSM card

Working caliper: 0.45 mm

Lock clearance: 0.60 mm

Dimensions are INTERNAL

Print/cut at 100% only

50 mm calibration bar

1:1 VECTOR | ONE-PIECE NET | PRINT AT 100% / NO SCALING | lock clearance 0.60 mm | Revision 1

Pyramid Ribbon Box

2.25 x 2.25 x 3 in internal | 350 GSM | caliper 0.45 mm

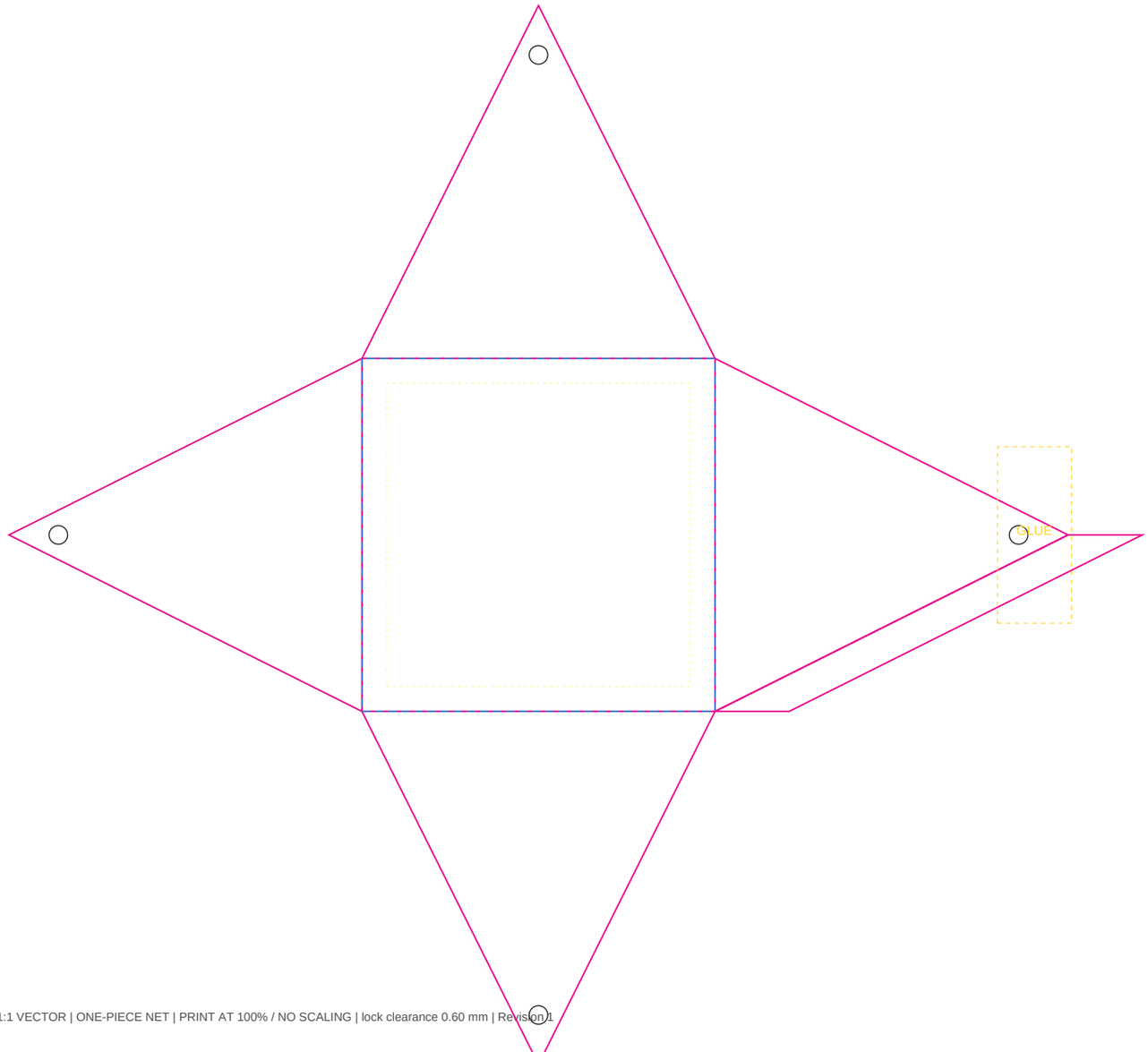

1:1 VECTOR | ONE-PIECE NET | PRINT AT 100% / NO SCALING | lock clearance 0.60 mm | Revision 1

ASSEMBLED PRODUCT REFERENCE

FINISHED INTERNAL SIZE

2.25 x 2.25 x 3 in

57.1 x 57.1 x 76.2 mm

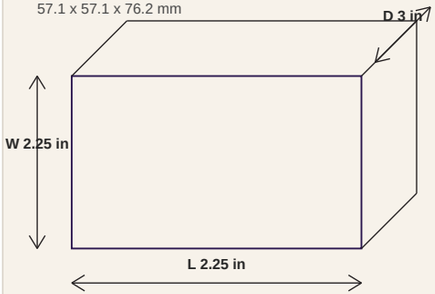

CUT

CREASE

SLOT / PUNCH

GLUE ZONE

Material: 350 GSM card

Working caliper: 0.45 mm

Lock clearance: 0.60 mm

Dimensions are INTERNAL

Print/cut at 100% only

50 mm calibration bar

Pyramid Ribbon Box

2.75 x 2.75 x 3.5 in internal | 350 GSM | caliper 0.45 mm

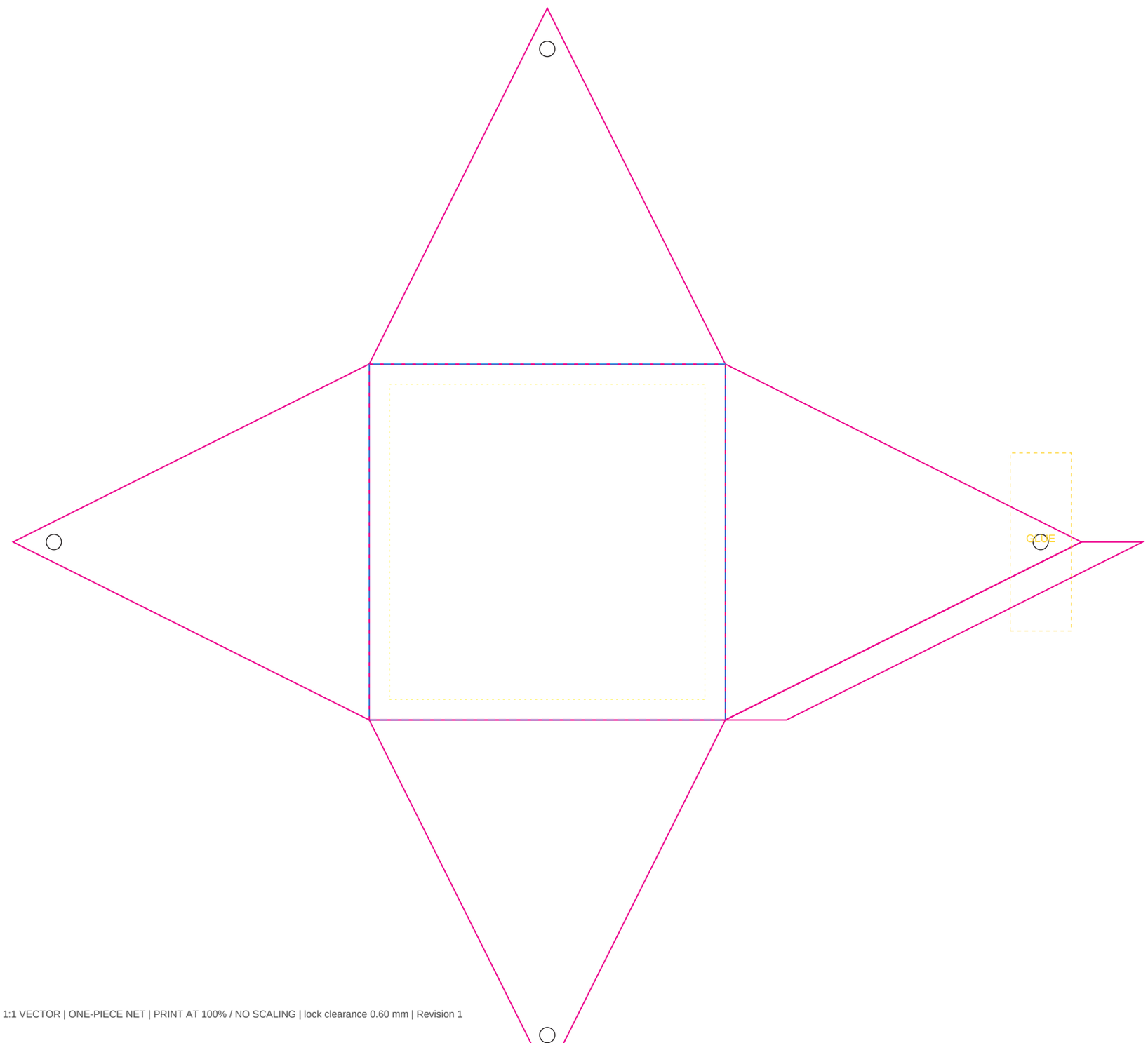

1:1 VECTOR | ONE-PIECE NET | PRINT AT 100% / NO SCALING | lock clearance 0.60 mm | Revision 1

ASSEMBLED PRODUCT REFERENCE

FINISHED INTERNAL SIZE

2.75 x 2.75 x 3.5 in

69.8 x 69.8 x 88.9 mm

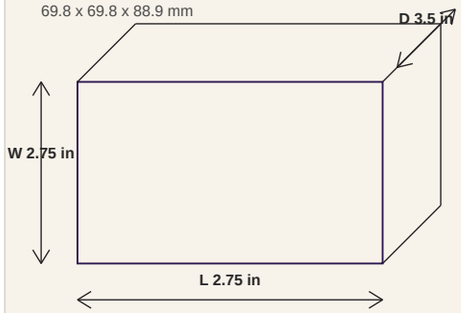

CUT

CREASE

SLOT / PUNCH

GLUE ZONE

Material: 350 GSM card

Working caliper: 0.45 mm

Lock clearance: 0.60 mm

Dimensions are INTERNAL

Print/cut at 100% only

50 mm calibration bar

Pyramid Ribbon Box

3.25 x 3.25 x 4 in internal | 350 GSM | caliper 0.45 mm

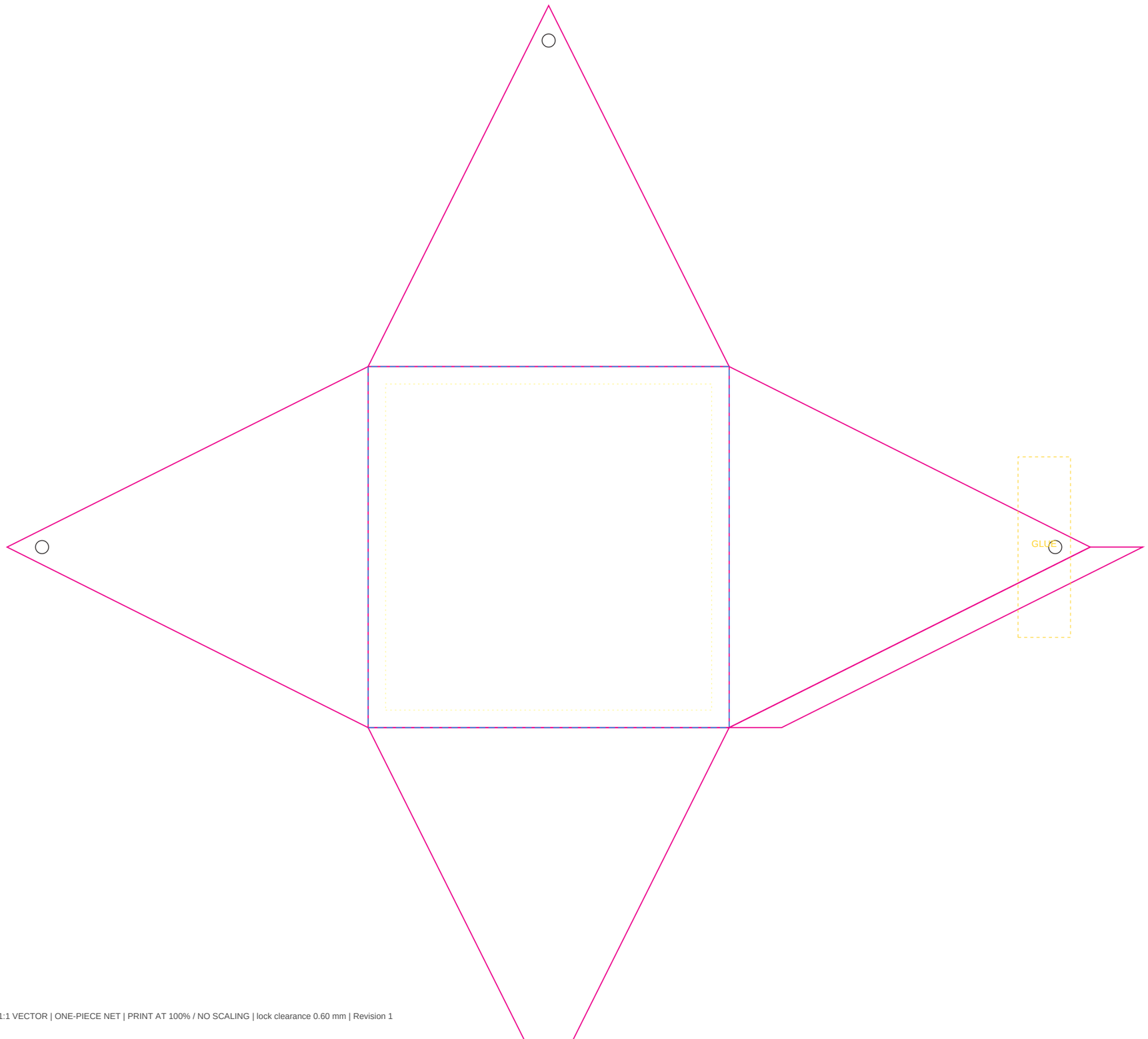

ASSEMBLED PRODUCT REFERENCE

FINISHED INTERNAL SIZE

3.25 x 3.25 x 4 in

82.5 x 82.5 x 101.6 mm

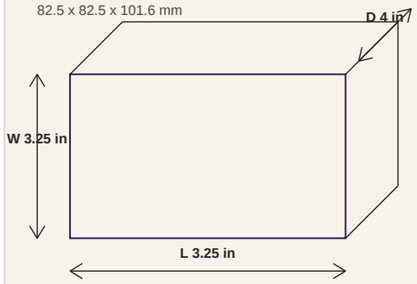

CUT

CREASE

SLOT / PUNCH

GLUE ZONE

Material: 350 GSM card

Working caliper: 0.45 mm

Lock clearance: 0.60 mm

Dimensions are INTERNAL

Print/cut at 100% only

50 mm calibration bar

1:1 VECTOR | ONE-PIECE NET | PRINT AT 100% / NO SCALING | lock clearance 0.60 mm | Revision 1

Hexagon Flower-Top Box

2.75 x 2.75 x 1.5 in internal | 350 GSM | caliper 0.45 mm

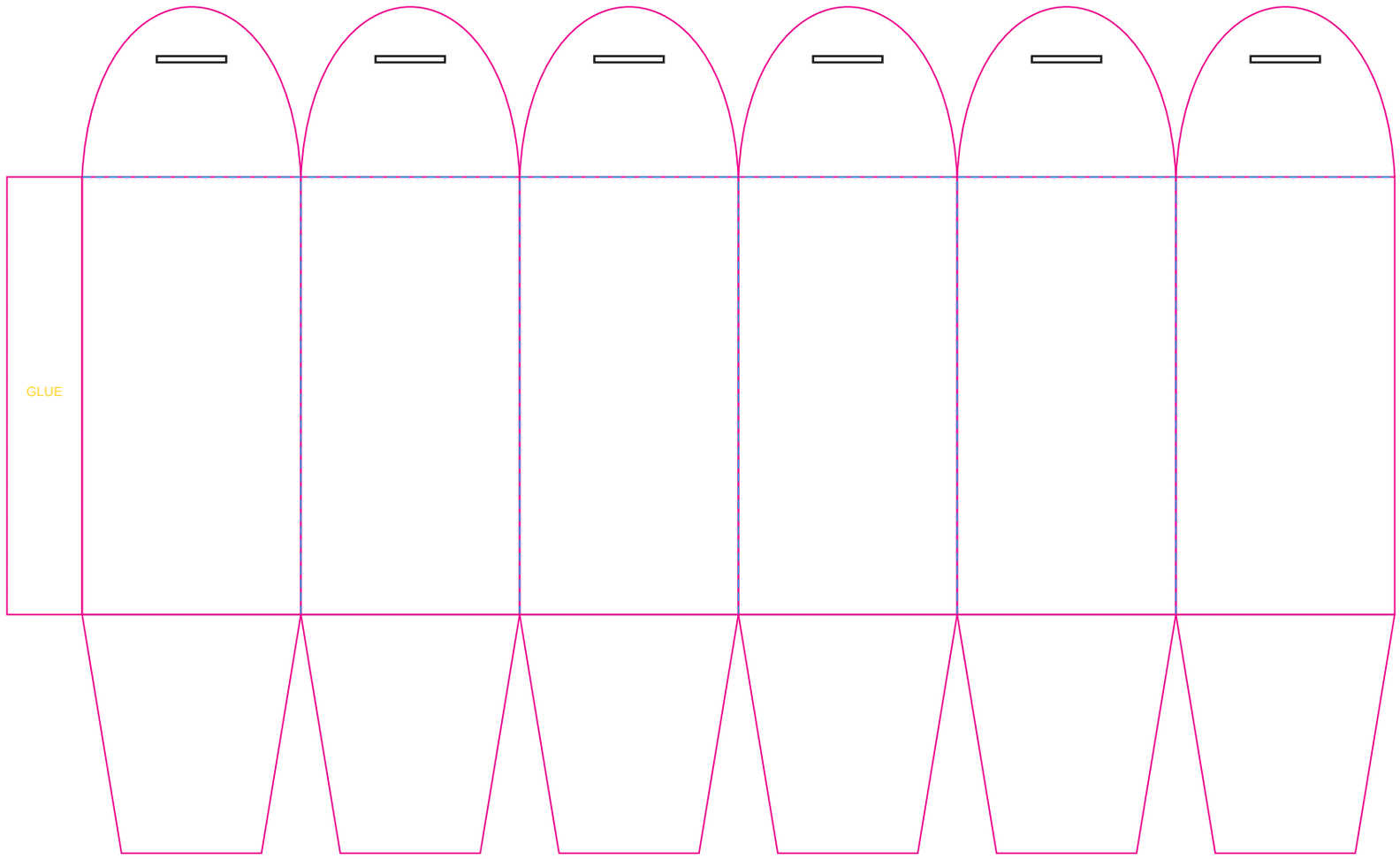

ASSEMBLED PRODUCT REFERENCE

FINISHED INTERNAL SIZE

2.75 x 2.75 x 1.5 in

69.8 x 69.8 x 38.1 mm

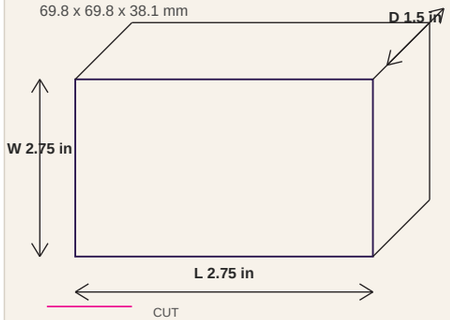

CUT

CREASE

SLOT / PUNCH

GLUE ZONE

Material: 350 GSM card

Working caliper: 0.45 mm

Lock clearance: 0.60 mm

Dimensions are INTERNAL

Print/cut at 100% only

50 mm calibration bar

1:1 VECTOR | ONE-PIECE NET | PRINT AT 100% / NO SCALING | lock clearance 0.60 mm | Revision 1

Hexagon Flower-Top Box

3.25 x 3.25 x 1.75 in internal | 350 GSM | caliper 0.45 mm

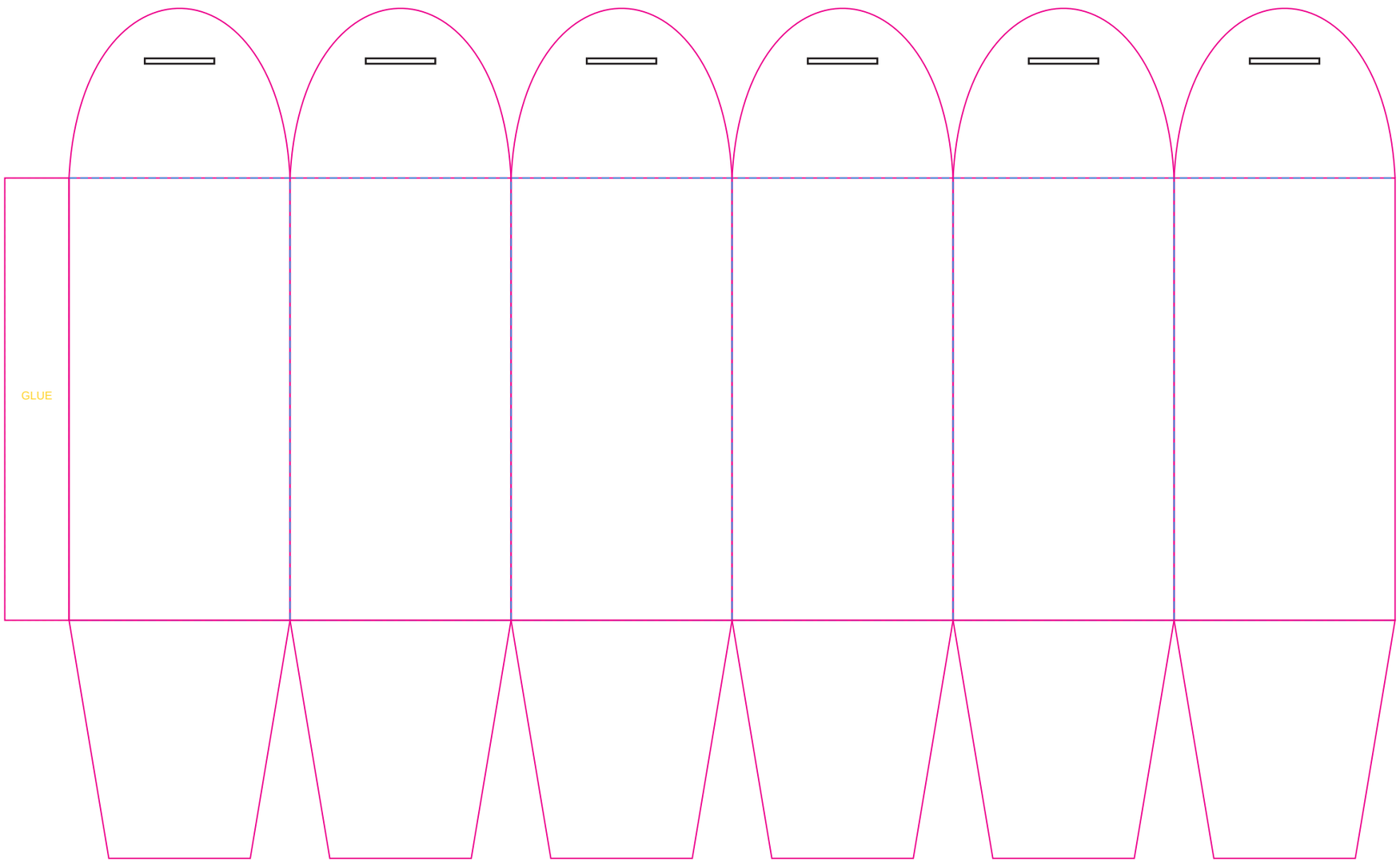

ASSEMBLED PRODUCT REFERENCE

FINISHED INTERNAL SIZE

3.25 x 3.25 x 1.75 in

82.5 x 82.5 x 44.4 mm

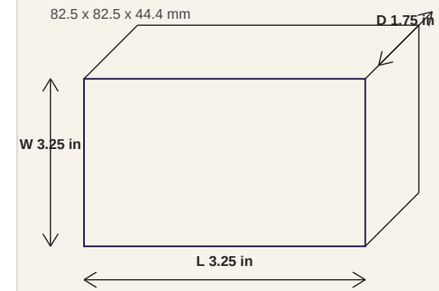

CUT

CREASE

SLOT / PUNCH

GLUE ZONE

Material: 350 GSM card

Working caliper: 0.45 mm

Lock clearance: 0.60 mm

Dimensions are INTERNAL

Print/cut at 100% only

50 mm calibration bar

1:1 VECTOR | ONE-PIECE NET | PRINT AT 100% / NO SCALING | lock clearance 0.60 mm | Revision 1

Hexagon Flower-Top Box

4 x 4 x 2 in internal | 350 GSM | caliper 0.45 mm

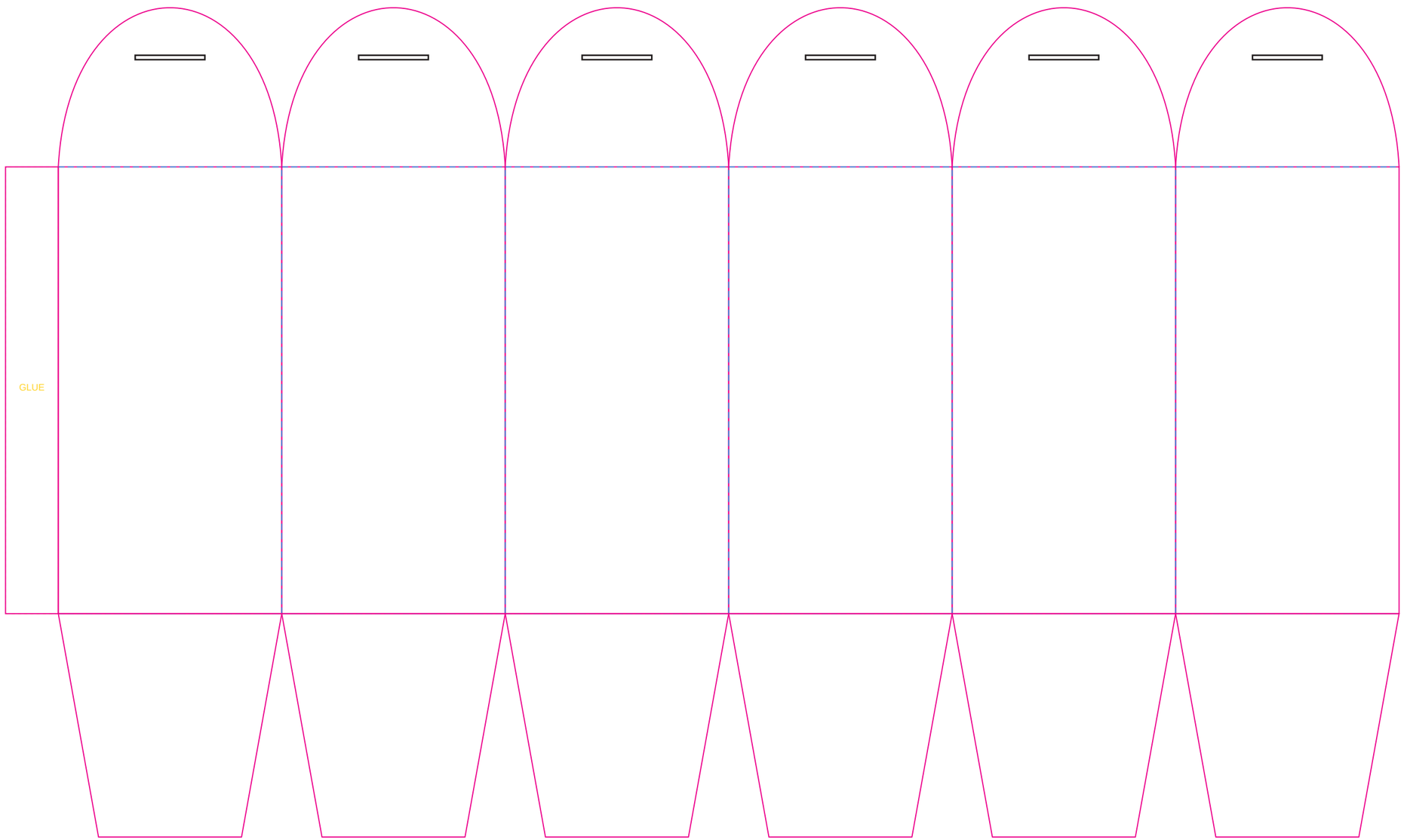

ASSEMBLED PRODUCT REFERENCE

FINISHED INTERNAL SIZE

4 x 4 x 2 in

101.6 x 101.6 x 50.8 mm

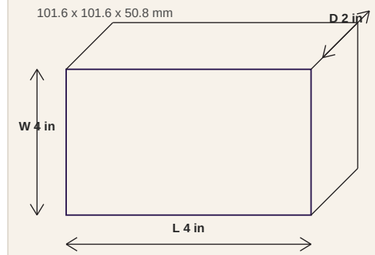

CUT

CREASE

SLOT / PUNCH

GLUE ZONE

Material: 350 GSM card

Working caliper: 0.45 mm

Lock clearance: 0.60 mm

Dimensions are INTERNAL

Print/cut at 100% only

50 mm calibration bar

1:1 VECTOR | ONE-PIECE NET | PRINT AT 100% / NO SCALING | lock clearance 0.60 mm | Revision 1